UpRight

SL20

SERIES

Works Platforms

European Specifications

Service & Parts Manual

FORWORD

HOW TO USE THIS MANUAL

This manual is divided into 6 sections.

SECTION 1 INTRODUCTION & SPECIFICATIONS

General description and machine specifications.

SECTION 2 MACHINE PREPARATION & OPERATION

Information on how to operate the work platform and how to prepare it for operation.

SECTION 3 MAINTENANCE

Preventative maintenance and service information.

SECTION 4 TROUBLESHOOTING

Causes and solutions to typical problems.

SECTION 5 SCHEMATICS

Schematics and valve block diagram with description and location of components. Large schematic drawings may be located in the back of the manual.

SECTION 6 ILLUSTRATED PARTS BREAKDOWN

Complete parts lists with illustrations. Large parts drawings may be located in the back of the manual.

SPECIAL INFORMATION

DANGER

Indicates the hazard or unsafe practice ***will*** *result in* ***severe injury or death.***

WARNING

Indicates the hazard or unsafe practice ***could*** *result in* ***severe injury or death.***

CAUTION

Indicates the hazard or unsafe practice ***could*** *result in* ***minor injury or property damage.***

NOTE: Gives helpful information.

Part Number : 502240-000 (Rev 00)

WORKSHOP PROCEDURES

All information contained in this manual is based on the latest product information available at the time of printing. We reserve the right to make changes at any time without notice. No part of this publication may be reproduced, stored in retrieval system, or transmitted, in any form by any means, electronic, mechanical, photocopying, recording, or otherwise, without the prior written permission of the publisher. This includes text, figures and tables.

⚠ CAUTION

Detailed descriptions of standard workshop procedures, safety principles and service operations are not included. Please note that this manual does contain warnings and cautions against some specific service methods which could cause personal injury, or could damage a machine or make it unsafe. Please understand that these warnings cannot cover all conceivable ways in which service, whether or not recommended by UpRight, Inc., might be done, or of the possible hazardous consequences of each conceivable way, nor could UpRight Inc. investigate all such ways. Anyone using service procedures or tools, whether or not recommended by UpRight Inc., must satisfy themselves thoroughly that neither personal safety nor machine safety will be jeopardized.

INTRODUCTION

1.1 PURPOSE

This manual provides illustrations and instructions for the operation and maintenance of the SL20 Series Work Platforms manufactured by UpRight in Dublin 12, Ireland.

SCOPE

This manual includes both operation and maintenance responsibilities concerning the SL20 Series Work Platform's readiness. The Maintenance Section covers scheduled maintenance, troubleshooting, repair, adjustment and replacement.

1.2 GENERAL DESCRIPTION

Figure 1-1: SL 20 Work Platform

The SL20 Series Work Platform is a self-propelled aerial work platform designed to be used as a means of elevating personnel and equipment and to provide a mobile work platform. It is designed to provide mobility with the platform in a raised or lowered position. Travel with the platform elevated is automatically limited to creep speed range.

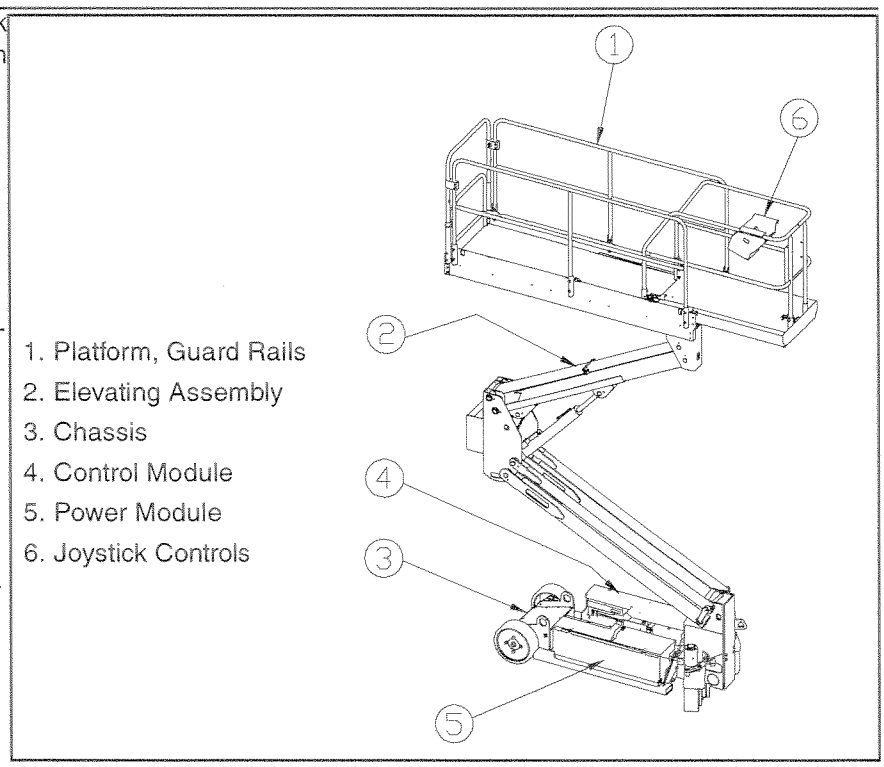

PURPOSE AND LIMITATIONS

The objective of the SL20 Series Work Platforms is to provide a quickly deployable, self-propelled, variable height work platform. The elevating function shall only be used when the work platform is on a firm level work area. The work platform is intended to be self-propelled when in relatively close proximity to the work area.This machine can be used by two operators with tools when indoors or by one operator with tools when outdoors.

NOTES:

Operation

2.1 Safety Rules

Electrocution Hazard

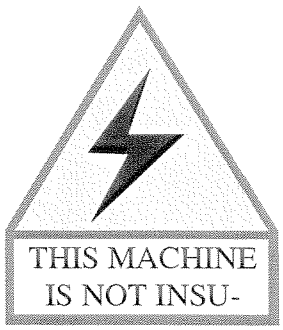

Tip Over Hazard

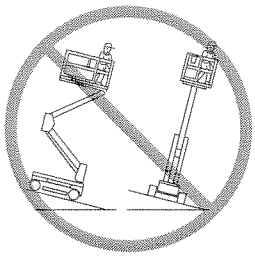

NEVER elevate the platform or drive the machine with platform elevated unless on firm level surface.

Collision Hazard

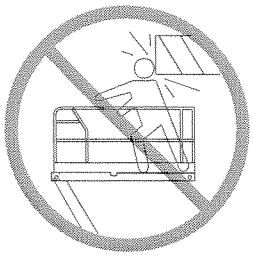

NEVER position the platform without first checking for overhead obstructions or other hazards.

Fall Hazard

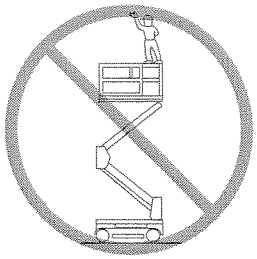

NEVER climb, stand or sit on platform guardrails or midrail.

PROHIBITED: Use of the machine without fitting of the fall restraint to the person and anchor point.

PROHIBITED: All persons other than those in the platform, from approaching within 1 metre of the machine.

DO NOT operate this machine without first having surveyed the work area for surface hazards such as holes, kerbs,bumps and debis.

PROHIBITED: Platform working loads in excess of 340kg (750 lbs) including 2 persons.

DISTRIBUTE all loads evenly on the platform.

PROHIBITED: Fitting of such items as sign boards, flags or ropes etc. to the platfrom or lifting assembly.

PROHIBITED: Operation of the machine without prior safety training, use by medically unfit persons or by persons who have not read and fully understood the operating instructions in this manual.

PROHIBITED: Driving of this machine on soft, uneven ground or on floors with a localised bearing of less than 15 kg/cm2 (213 psi)

PROHIBITED: Use of this machine in winds exceeding 27mph (12.5 m/s - Beaufort Force 6)

PROHIBITED: Use of ladders or scaffolding on the platform.

PROHIBITED: Attachment of overhanging loads; size increasing of the working platform; use of this machine as a crane or for any other application involving additional loads or forces.

PROHIBITED: Any changes or modifications to the operating or safety systems.

INSPECT the machine thoroughly for missing decals, cracked welds, loose hardware, hydraulic leaks, damaged cables, loose wire connections or wheel bolts. DO NOT use damaged equipment.(Contact UpRight Irl. Ltd. for instructions).

PROHIBITED: Climbing down any elevating assembly with the platform elevated.

PROHIBITED: Servicing while the platform is elevated unless first blocking/supporting the elevating assembly.

PROHIBITED: Recharging of batteries near open flames or at a source of sparks.

PROHIBITED: Replacement of any component or part with anything other than original UpRight replacement parts (unless specifically agreed by the manufacturer)

PROHIBITED: Unattended storage (long or short term) of the machine with the platform in the raised position or with the Brakes disengaged.

PROHIBITED: Use, other than emmergency down functions, of the machine while the alarm sounds.

PROHIBITED: Exceeding 200 N (45 lbs) of side force per occupant.

PROHIBITED: Use of the machine in the elevated position with the swing gate held open by any means.

Introduction

This manual covers operation of the SL20 Self Propelled Elevating Work Platform. **This manual must be stored on the machine at all times.**

Pre-Operation Safety Inspection

Carefully read, understand and follow all safety rules, operating instructions, and labels. Perform the following steps each day before use.

1. Open module covers and inspect for damage, oil leaks or missing parts.
2. Check the level of the hydraulic oil with the platform fully lowered by way of a dipstick. Add hydraulic fluid if necessary.
3. Check that fluid level in the batteries is correct (See Battery Maintenance , page7).
4. Verify that batteries are charged.
5. Check that AC extension cord has been disconnected from charger.
6. Check that all guardrails are in place with fasteners properly tightened.
7. Inspect the machine thoroughly for cracked welds, loose hardware, hydraulic leaks, damaged control cable, loose wire connections and wheel bolts.
8. Move the machine, if necessary, to an unobstructed area to allow for full elevation.
9. Pull Chassis Emergency Stop Switch to the ON position.
10. Pull Platform Emergency Stop Switch to the ON position.

Figure 1: Chassis Controls

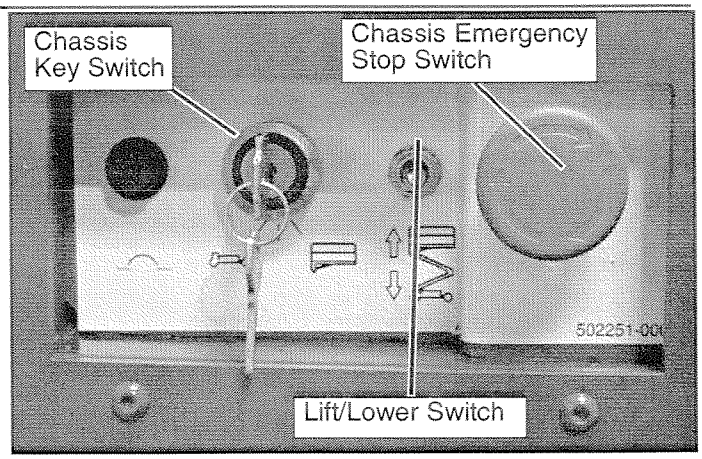

11. Turn and hold the Chassis Key Switch to CHASSIS. Push the Chassis Lift/Lower Switch to lift position and fully elevate the platform.
12. Visually inspect the elevating assembly, lift cylinder, cables and hoses for cracked welds, loose hardware, hydraulic leaks, loose wire connections and erratic operation. Check for missing or loose parts.
13. Verify that depression mechanism supports have fully rotated into position under each module.
14. Turn and hold the Chassis Key Switch to CHASSIS. Partially lower the platform by pushing the Chassis Lift/Lower Switch to LOWER, and check operation of the audible lowering alarm.
15. Pull out on the Emergency Lowering Knob to check for proper operation. Once the platform has lowered completely, release the knob.

Figure 2: Emergency Lowering Knob

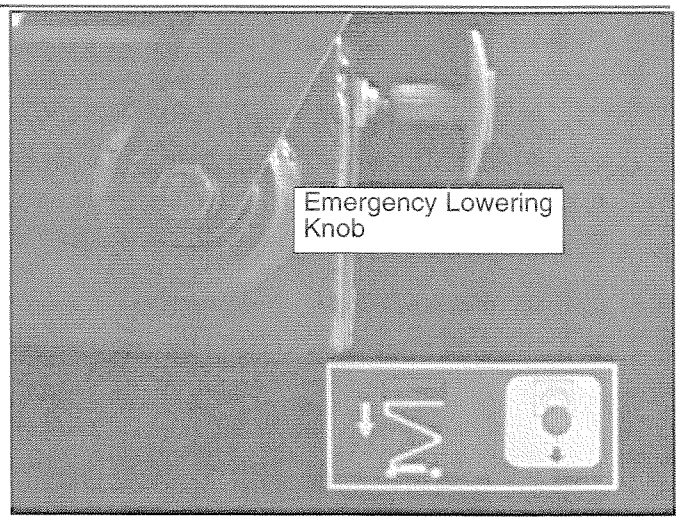

16. Turn the Chassis Key Switch to DECK.
17. Close and secure module covers.
18. Check that route is clear of obstacles (persons, obstructions, holes, drop-offs, bumps, and debris), is level, and is capable of supporting the wheel loads.
19. Mount the platform and properly close the entrance.

Figure 3: Platform Controls

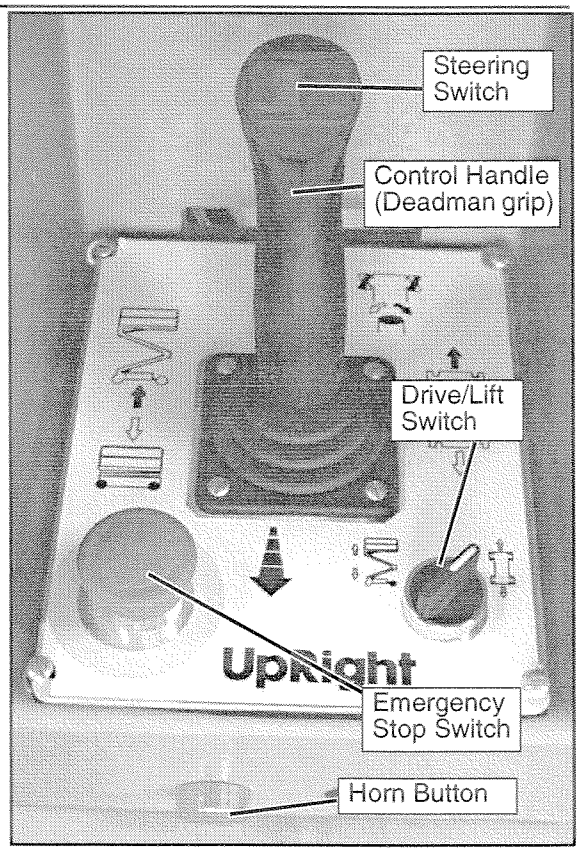

20. PLATFORM CONTROLS. Turn the Drive/Lift Switch to DRIVE. While holding in the Interlock Switch, move the Control Handle to FORWARD, then REVERSE, to check for speed control.
21. Push the Steering Switch RIGHT, then LEFT, to check for steering control.
22. Turn the Drive/Lift Switch to LIFT. Grasp the Control Handle, depress the Interlock Switch and push it forward to check platform lift controls. Raise the platform to full elevation.
23. Pull back on the Control Handle. The platform should descend and the audible lowering alarm should sound.
24. The Platform will descend to the Loading Clearance Height, then stop. Check around the base of the platform to ensure that no one is in contact with the machine.
25. If the Control Handle is continually held in the back position decent will continue from the loading clearance height after a five second delay. While loading on a gradient of 18% or higher the platform must be at this height, when loading is complete please ensure that the platform is then put in the fully stowed position before tieing the machine down for transit.
26. Push the Platform Emergency Stop Switch button to check for proper operation. All the machine functions should be disabled. Pull out the Platform Emergency Stop Switch to resume.

OPERATION

Before operating the work platform, ensure that the pre-operation safety inspection has been completed and that any deficiencies have been corrected. **Never operate a damaged or malfunctioning machine.** The operator must be thoroughly trained on this machine, and must read, fully understand, and follow this Operator Manual.

PLATFORM EXTENSION

Figure 4: Platform Extension

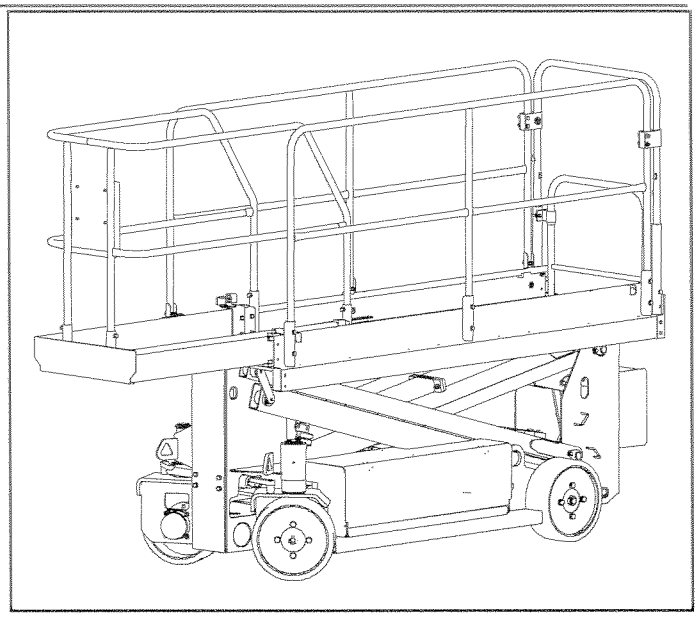

1. Mount the platform and properly close the entrance.
2. Depress the foot lever located at the rear of the platform extension. Push the platform extension forward until the pin engages the front stop.
3. To retract the platform extension, depress the foot lever and pull the platform extension toward the rear of the machine until the pin engages the rear stop.

TRAVEL WITH PLATFORM LOWERED

1. Check that route is clear of obstacles (persons, obstructions, holes, drop-offs, bumps, and debris), is level, and is capable of supporting the wheel loads.
2. Verify that the Chassis Key Switch is turned to DECK and that Chassis Emergency Stop Switch is on (Pushed in).
3. Mount the platform and properly close the entrance.
4. Check clearances above, below, and to the sides of the platform.
5. Pull the Platform Emergency Stop Button out to the ON position.
6. Turn the Drive/Lift Switch to DRIVE.
7. Hold in the Interlock Switch and move the Control Handle to FORWARD or REVERSE to travel in the desired direction. The speed of the machine will vary depending on how far from center the Control Handle is moved..

STEERING

1. Turn the Drive/Lift Switch to DRIVE.
2. While holding in the Interlock Switch, push the Steering Switch to RIGHT or LEFT to turn wheels in the desired direction. Observe the tires while operating the machine to ensure proper direction.

   NOTE: Steering is not self-centering. Wheels must be returned to the straight ahead position by operating the Steering Switch.

ELEVATING PLATFORM

1. Select a firm, level surface.
2. Turn the Drive/Lift Switch to LIFT.
3. While holding in the Interlock Switch, push the Control Handle forward.
4. If the machine is not level the tilt alarm will sound and the machine will not lift or drive. **If the tilt alarm sounds the platform must be lowered and the machine moved to a firm level surface before attempting to re-elevate the platform.**

   NOTE: Depression supports will deploy automatically as the platform elevates and will retract after the platform has been lowered completely and has been driven.

Travel With Platform Elevated

NOTE: The machine will travel at reduced speed when the platform is elevated.

1. Check that the route is clear of obstacles (persons, obstructions, holes, drop-offs, bumps, and debris), is level, and is capable of supporting the wheel loads.
2. Check clearances above, below and to the sides of platform.
3. Turn Drive/Lift Switch to DRIVE.
4. Hold in the Interlock Switch and move the Control Handle to FORWARD or REVERSE to travel in the desired direction. The speed of the machine will vary depending on how far from center the Control Handle is moved.
5. If the machine is not level the tilt alarm will sound and the machine will not lift or drive. **If the tilt alarm sounds the platform must be lowered and the machine moved to a firm, level surface before attempting to re-elevate the platform.**

Lowering Platform

1. Turn Drive/Lift Switch to LIFT.
2. Hold in the Interlock Switch and pull back on the Control Handle to lower the platform. The Platform will descend to the Loading Clearance Height, then stop. Check around the base of the platform to ensure that no one is in contact with the machine.
3. Press the Loading Clearance Lowering Switch and pull back on the Control Handle to lower platform completely.

Emergency Lowering

WARNING

If the platform should fail to lower, NEVER climb down the elevating assembly.

The Emergency Lowering Valve Knob is located at the front of the chassis (Figur e2).

1. Open the Emergency Lowering Valve by pulling and holding the knob.
2. To close, release the knob. The platform will not elevate if the Emergency Lowering Valve is open.

After Use Each Day

1. Ensure that the platform is fully lowered.
2. Park the machine on a firm, level surface, preferably under cover, secure against vandals, children, and unauthorized operation.
3. Turn the key switch to **OFF** and remove the key to prevent unauthorized operation.

Electrocution Hazard

This machine is not insulated. Follow your national safety standards and maintain the required safety distance when working near energized equipment.

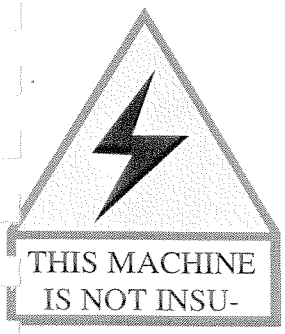

Transporting The Work Platform

Figure 5: Transporting the Work Platform

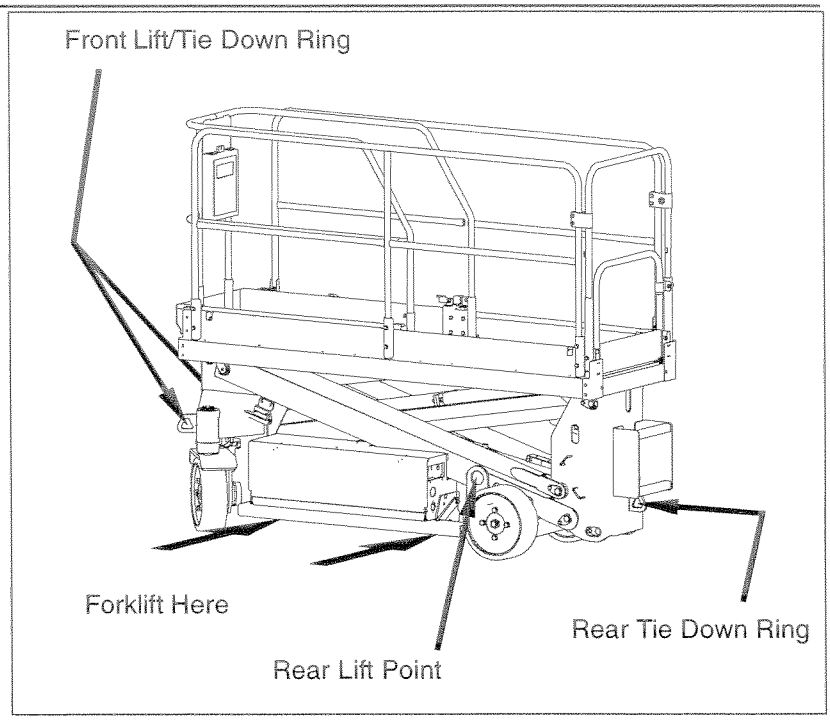

By Forklift

DANGER

Forklifting is for transporting only.

See specifications for weight of work platform and be certain that forklift is of adequate capacity to lift work platform.

Forklift from the side by lifting under the chassis modules.

By Truck

1. Using the Control Handle, lift the platform above 2.4 m (8 ft.), then lower. The platform will stop lowering at the Loading Clearance Height.
2. Maneuver the work platform into transport position, hold the Control Handle in the back position, after a five second delay the platform will continue to decend to the fully lowered position then chock the wheels. The platform must be in the fully lowered position for transport.
3. Secure the work platform to the transport vehicle with chains or straps of adequate load capacity attached to the front and rear lift/tie down points on both sides of the chassis.

CAUTION

Overtightening of chains or straps through tie down lugs may result in damage to work platform.

WARNING

Never perform service in the elevating assembly area while the platform is elevated without first blocking the elevating assembly.

DO NOT stand in elevating assembly area while deploying or storing brace.

DO NOT block elevating assembly with a load on the platform.

Blocking The Elevating Assembly

Brace Installation

Figure 6: Blocking the Elevating Assembly

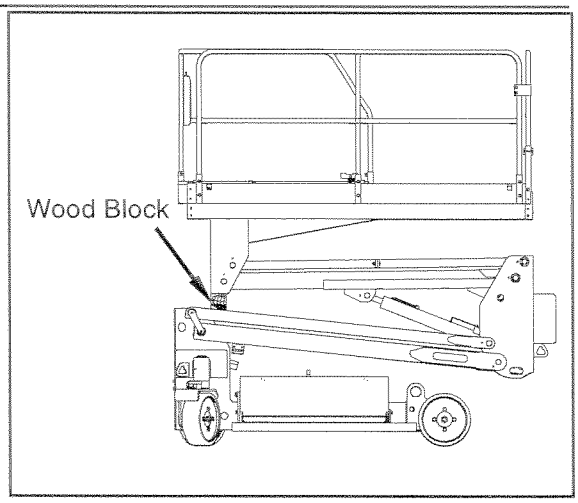

1. Park the work platform on firm, level surface.
2. Turn and hold the Chassis Key Switch to Chassis. Push the Lift/Lower Switch to LIFT and elevate the platform approximately two feet.
3. Place a 10 cm x 10 cm (4 inch x 4 inch) wood block as shown in Figure6.
4. Turn and hold the Chassis Key Switch to CHASSIS. Push Chassis Lift Switch to LOWER and gradually lower the platform until the elevating assembly is supported by the wood block.

Brace Removal

1. Turn and hold the Chassis Key Switch to Chassis. Push the Lift/Lower Switch to LIFT and gradually raise the platform until the wood block can be removed.
2. Remove the wood block.
3. Turn and hold the Chassis Key Switch to CHASSIS. Push the Lift/Lower Switch to LOWER and completely lower platform.

Battery Maintenance

WARNING

Hazard of explosive gas mixture. Keep sparks, flame, and smoking material away from battery.

Always wear safety glasses when working near batteries.

Battery fluid is highly corrosive. Thoroughly rinse away any spilled fluid with clean water.

Always replace batteries with UpRight batteries or manufacturer approved replacements weighing 28.1 kg (62 lbs.) each.

- Check the battery fluid levels daily, especially if the work platform is being used in a warm, dry climate.
- If the electrolyte level is lower than 10 mm (3/8 in.) above the plates, add distilled water ONLY. Do not use tap water with high mineral content, as it will shorten battery life.
- The battery and cables should be inspected regularly for signs of cracks in the case, electrolyte leakage and corrosion of the terminals. Inspect cables for worn spots or breaks in the insulation and for broken cable terminals. Keep terminals and tops of batteries clean.
- Refer to the Service Manual to extend battery life and for complete service instructions.

Battery Charging

Figure 7: Power Module

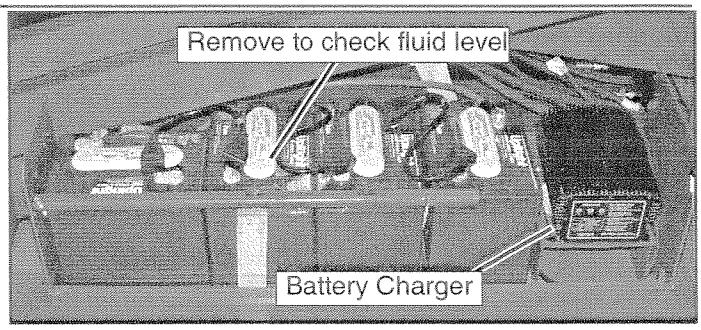

Charge the batteries at end of each work shift or sooner if batteries have been discharged.

WARNING

Charge batteries only in a well ventilated area.

Do not charge the batteries if the work platform is near a source of sparks or flames.

Permanent damage to the batteries will result if the batteries are not recharged immediately after discharging.

Never leave the battery charger operating for more than two days.

Never disconnect the cables from the batteries when the battery charger is operating.

Keep the battery charger dry.

1. Check battery fluid level. If electrolyte level is lower than 10 mm (3/8 in.) above plates add distilled water only.
2. Push in emergency stop and remove key from keyswitch.
3. Connect an extension cord to the battery charger plug at end of left module. Connect extension cord (3 mm^2 [12 gauge] minimum conductor diameter; 15 m [50 ft.] maximum length) to properly grounded outlet of correct voltage and frequency.
4. The battery charger turns on automatically after a short delay.

   NOTE: The battery charger circuit must be used with a GFI (Ground Fault Circuit Interrupt) outlet.

   NOTE: DO NOT operate the machine while charger is plugged in.

PREVENTATIVE MAINTENANCE

The complete inspection consists of periodic visual and operational checks, together with all necessary minor adjustments to assure proper performance. Daily inspection will prevent abnormal wear and will prolong the life of all systems. The inspection and maintenance schedule is to be performed at regular intervals. Inspection and maintenance shall be performed by personnel who are trained and familiar with mechanical and electrical procedures.

WARNING!

Before performing preventative maintenance, familiarize yourself with the operation of the machine.

Always block the elevating assembly whenever it is necessary to enter the scissor assembly to perform maintenance while the platform is elevated.

The preventative maintenance table has been designed to be used primarily for machine service and maintenance repair. Please photocopy the following page and use the table as a checklist when inspecting the machine for service.

Preventative Maintenance Checklist

Preventative Maintenance Key

Interval

Daily = each shift or every day

50h/30d = every 50 hours or 30 days

250h/6m = every 250 hours or 6 months

1000h/2y = every 1000 hours or 2 years

Y = Yes/Acceptable

N = No/Not Acceptable

R = Repaired/Acceptable

Preventative Maintenance Report

Date: _____

Owner: _____

Model No: _____

Serial No: _____

Serviced By: _____

Service Interval: _____

COMPONENT	INSPECTION OR SERVICES	INTERVAL	Y	N	R
Battery	Check electrolyte level.	Daily			
	Check specific gravity.	6m			
	Clean exterior.	6m			
	Check battery cable condition.	Daily			
	Clean terminals.	6m			
Hydraulic Oil	Check oil level.	Daily			
	Change filter.	6m			
	Drain and replace oil.	2y			
Hydraulic System	Check for leaks.	Daily			
	Check hose connections.	30d			
	Check hoses for exterior wear.	30d			
Emergency Hydraulic System	Operate the emergency lowering valve and check for serviceability.	Daily			
Controller	Check switch operation.	Daily			
Control Cable	Check the exterior of the cable for pinching, binding or wear.	Daily			
Platform Deck and Rails	Check fasteners for proper torque.	6m			
	Check welds for cracks.	Daily			
	Check condition of deck.	Daily			
Tires	Check for damage.	Daily			
	Check lug nuts (torque to 108 N·m [80 ft. lbs.]).	6m			
Hydraulic Pump	Wipe clean.	30d			
	Check for leaks at mating surfaces.	30d			
	Check for hose fitting leaks.	Daily			
	Check mounting bolts for proper torque.	6m			
Drive Motors	Check for operation and leaks.	Daily			

COMPONENT	INSPECTION OR SERVICES	INTERVAL	Y	N	R
Steering System	Check hardware & fittings for proper torque.	6m			
	Grease pivot pins.	30d			
	Oil king pins.	30d			
	Check steering cylinder for leaks.	30d			
Elevating Assembly	Inspect for structural cracks.	Daily			
	Check pivot points for wear.	6m			
	Check mounting pin pivot bolts for proper torque.	6m			
	Check elevating arms for bending.	6m			
Chassis	Check hoses for pinch or rubbing points.	Daily			
	Check component mounting for proper torque.	6m			
	Check welds for cracks.	Daily			
Lift Cylinder	Check the cylinder rod for wear.	30d			
	Check mounting pin pivot bolts for proper torque.	6m			
	Check seals for leaks.	30d			
	Inspect pivot points for wear.	6m			
	Check fittings for proper torque.	6m			
Entire Unit	Check for and repair collision damage.	Daily			
	Check fasteners for proper torque.	6m			
	Check for corrosion-remove and repaint.	6m			
	Lubricate.	30d			
Labels	Check for peeling, missing, or unreadable labels & replace.	Daily			

SPECIFICATIONS

ITEM	SL20
Platform Size (Inside toeboards)	0.74 m x 2.53 m (29 in. x 99.5 in.) Inside Toeboards
Maximum Platform Capacity	
Standard w/ Extension	340 kg (750 lbs.)
on Extension	110 kg (250 lbs.)
Maximum Number of Occupants	
Standard w/ Extension	2 People
on Extension	1 person
Height	
Working Height	8.1m (26.5 ft.)
Maximum Platform Height	6.10 m (20 ft.)
Maximum Drivable Height	6.10 m (20 ft.)
Dimensions	
Weight, Standard	1411 kg (3100 lbs.)
Overall Width	0.84 m (33 in.)
Overall Height	2.1 m (82.6 in.)
Overall Length, Standard	2.75 m (107.5 in.)
Drive Speed	
Platform Lowered	3.70 km/h (2.3 mph)
Platform Raised	1.0 km/h (0.61 mph)
Energy Source	24 V Battery Pack (4-220 A Hour, 6 V Batteries, Minimum Weight 28 kg [62 lbs.] each), 4 HP DC Electric Motor
System Voltage	24 V DC
Battery Charger	25 A
Hydraulic Tank Capacity	15.2 L (4 US gal.)
Maximum Hydraulic System Pressure	207 bar (3000 psi)
Hydraulic Fluid	
Above 0°C (32°F)	ISO #46
Below 0°C (32°F)	ISO #32
Below -17°C (0°F)	ISO #15
Lift System	Single Lift Cylinder
Lift Speed	14 seconds
Control System	Motor Control, Rotary Selector Switch, and Red Mushroom Emergency Stop Switch
Drive System	Dual Front Wheel Hydraulic Motors
Tires	381 mm (15 in.) Diameter Solid Rubber, non-marking
Parking Brakes	Dual – Spring Applied, Hydraulically Released
Turning Radius (inside)	0.64 m (25 in.) Inside
Maximum Gradeability	25% (14°)
Wheel Base	1.78 m (70 in.)
Guardrails	1.02 m (40 in.)
Toeboards	152 mm (6 in.)
Noise Level	70 db MAX, Ref : Machinery directive, Annex 1 # 1.7.4.f

*Specifications are subject to change without notice. Hot weather or heavy use may affect performance. Refer to the Service Manual for complete parts and service information. The SL20 meets or exceeds all applicable CE and GS machinery directive requirements.

NOTES:

Section 3

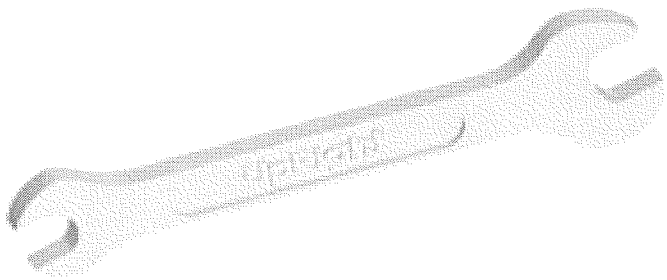

MAINTENANCE

3.1 INTRODUCTION

Reference: • Section 2 for recommended maintenance intervals.

⚠ WARNING

Be sure to read, understand and follow all information in the Operation Section of this manual before attempting to operate or perform service on any Work Platform.

This section contains instructions for the maintenance of the Work Platform. Procedures for the operation inspection, adjustment, scheduled maintenance, and repair/removal are included.

Referring to Section 2 will aid in understanding the operation and function of the various components and systems of the work platform, and help in diagnosing and repair of the machine.

TERMINOLOGY

TERMINAL BLOCKS Located in upper and lower control boxes. Designated by TB##. (##) designates the number of the block which is written on the terminal block. "R" right or "L" may follow the number.

WIRE COLOR Indicated by color/color. First color refers to insulation color and second color indicates stripe. If sec ond color is not given there is no stripe.

GENERAL PROCEDURES

CONTACT BLOCKS Removed by inserting a flat screwdriver into the slot at either end of block and prying outward. Installed by pressing into an empty slot.

TERMINAL BLOCKS Remove wires by inserting a small flat bladed screwdriver into square beside wire. Install wires by stripping ½" of insulation, inserting screwdriver in square and inserting wire. Be sure no strands are bend backwards. Replace wires with same rating and type.

3.2 DATE CODE IDENTIFICATION ON HOSES

MANULI uses an eight digit code: Day, Month, Year.

i.e.: 28 05 2002 - (28 May 2002).

3.3 Special Tools

The following is a list of special tools which may be required to perform certain maintenance procedures on the work platform.

- 0-69 bar (0-1000 psi) (0-69 bar) Hydraulic Pressure Gauge with Adapter Fittings
- 0-207 bar (0-3000 psi) (0-207 bar) Hydraulic Pressure Gauge with Adapter Fittings
- 0-414 bar (0-6000 psi) (0-414 bar) Hydraulic Pressure Gauge with Adapter Fittings
- Small Deutsch Connector Field Kit (UpRight P/N 030899-000)
- Large Deutsch Connector Field Kit (UpRight P/N 030898-000)
- Inclinometer

3.4 Deutsch Connectors

Deutsch connectors are designed so that connector parts, contacts, or electrical cables may be replaced without replacing the entire connector.

Figure 3-1: Deutsch Connector Kit

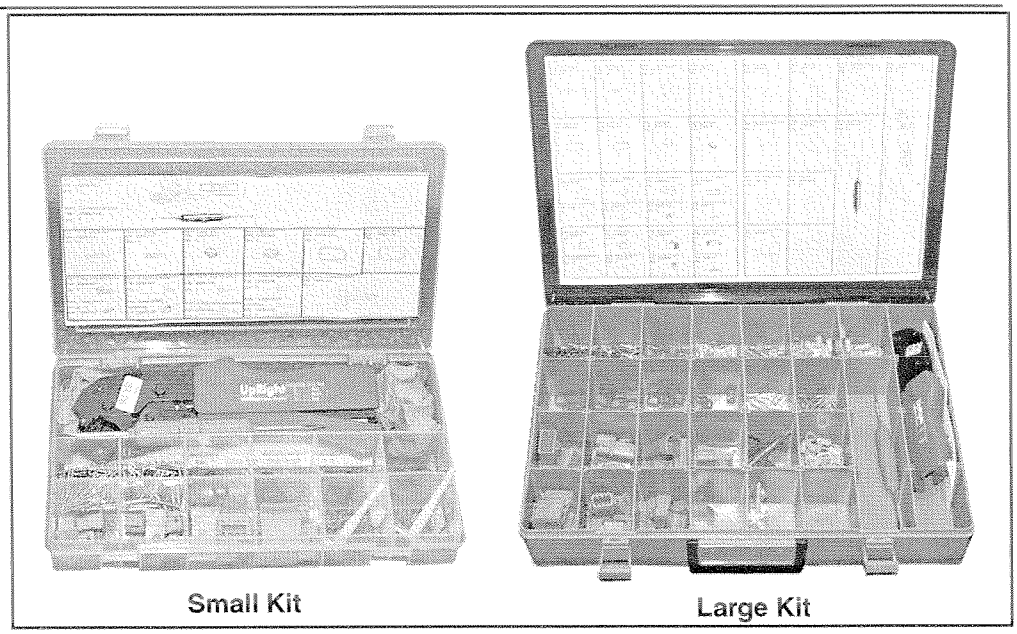

Figure 3-2: Plugs and Receptacles, Deutsch Connectors

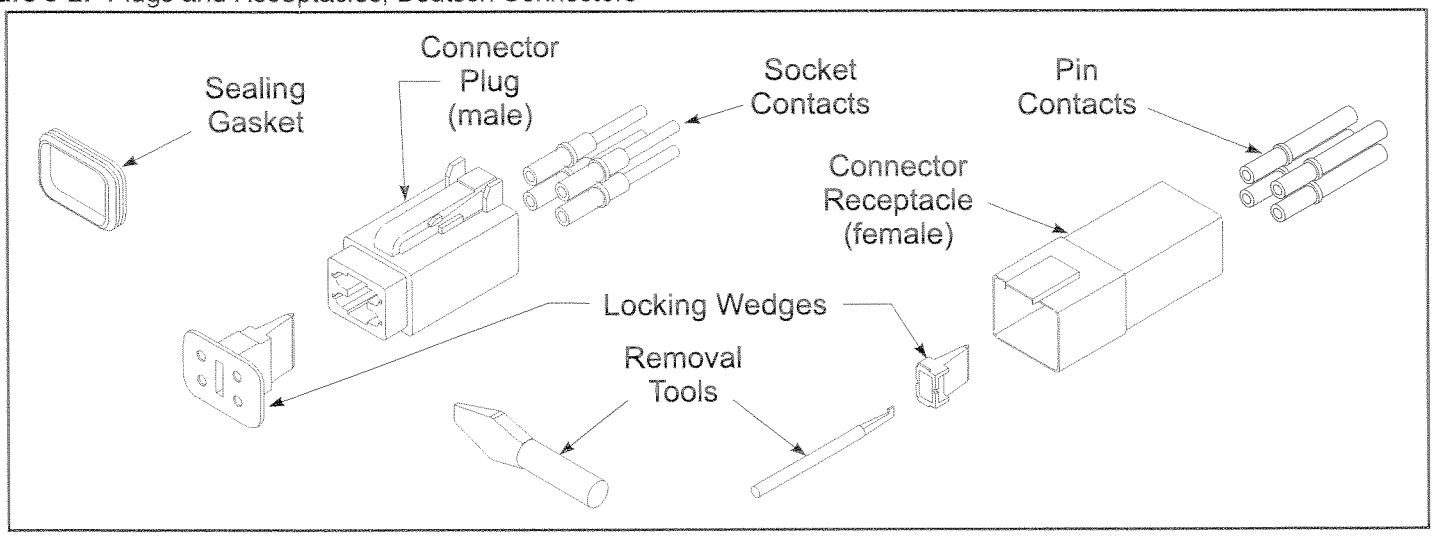

Male Connector (Plug)

1. Disconnect the male connector (plug) from the female connector (receptacle).
2. Using the flat end of the RemovalTool (or flat blade screwdriver), pry the Locking Wedge from the Male Connector. Care should be taken that the Silicon Gasket is not damaged during this procedure.
3. Check all parts for damage. Replace all parts which are damaged or worn.
4. Replace or recrimp the wires and contacts. Refer to "Crimping" procedure.

Female Connector (Receptacle)

1. Disconnect the male connector (plug) from the female connector (receptacle).
2. Using the notched end of the Removal Tool (or a wire hook), pull the Locking Wedge from the Female Connector.
3. Check all parts for damage. Replace all parts which are damaged or worn.
4. Replace or recrimp the wires and contacts. Refer to "Crimping" procedure.

Releasing Locking Fingers

Figure 3-3: Locking Finger, Deutsch Connector

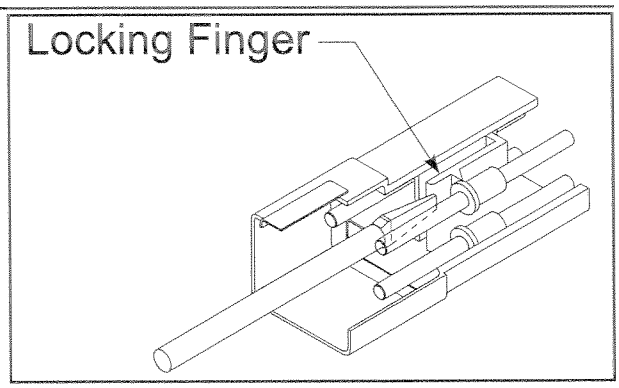

1. The Locking Fingers can be released following the removal of the Locking Wedge of either the male or female connector.
2. Use the removal tool (or flat bladed screwdriver) to push the Locking Fingers aside. This will release the grip on the contact.
3. Pull the wire and contact out of the connector.

Crimping

1. Strip 6 mm from the wire.

NOTE: Complete crimping instructions are included in each Field Kit.

2. Insert the contact into the crimping tool.
3. Insert the stripped wire into the contact. Copper strands should be visible in the bleed hole of the contact and no copper strands should be loose (outside) of the contact barrel.
4. Completely close the handles of the crimping tool. Release the handles of the crimping tool and remove the crimped contact.
5. Inspect the crimped contact to ensure that all strands are secure in the crimp barrel.

3.5 Blocking Elevating Assembly

WARNING

Never perform service on the work platform in the elevating assembly area while platform is elevated without first blocking the elevating assembly.

***DO NOT** stand in elevating assembly area while deploying or storing brace.*

DO NOT block elevating assembly with a load in the platform.

Figure 3-4: **Blocking The Elevating Assembly**

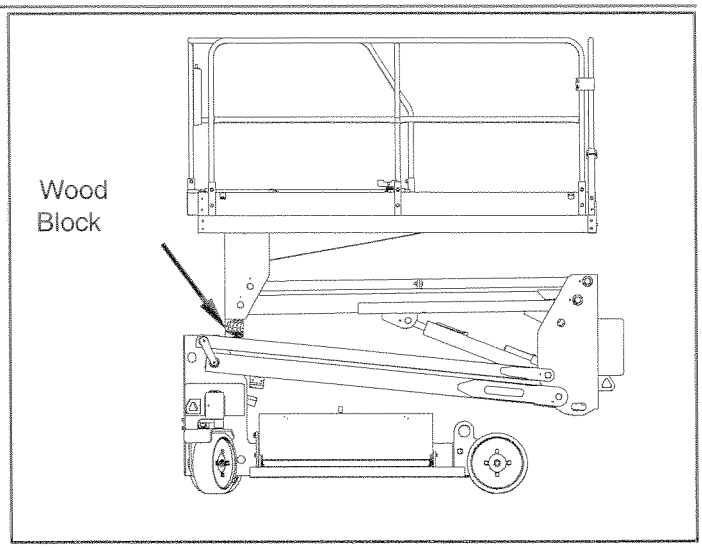

Brace Installation

1. Park the work platform on firm, level ground.
2. Position chassis lift switch to LIFT and elevate platform approximately two feet (60cm).
3. Place 10 cm x 10 cm (4 inch x 4 inch) wood block as shown in Figure 3-4.
4. Push chassis lift switch to LOWER position and gradually lower platform until boom is supported by the wood block.

Brace Removal

1. Push chassis lift switch to LIFT position and gradually raise platform until wood block can be removed.
2. Remove wood block.
3. Push chassis lift switch to LOWER position and completely lower platform.
4. Close control module cover

3.6 Battery Maintenance

Electrical energy for the motor is supplied by four 6-volt batteries wired in series for 24 volts DC. Proper care and maintenance of the batteries and motor will ensure maximum performance from the work platform.

WARNING

Hazard of explosive gas mixture. Keep sparks, flame, and smoking material away from battery.

Always wear safety glasses when working with batteries.

Battery fluid is highly corrosive. Thoroughly rinse away any spilled fluid with clean water.

Always replace batteries with UpRight batteries or manufacturer approved replacements weighing 28 kg (62 lbs.) each.

Battery Inspection and Cleaning

Check battery fluid level daily, especially if work platform is being used in a warm, dry climate. If required add distilled water only. Use of tap water with high mineral content will shorten battery life.

CAUTION

If battery water level is not maintained, batteries will not fully charge, creating a low discharge rate which could reduce motor/pump output and void warranty.

Batteries should be inspected periodically for signs of cracks in the cases, electrolyte leakage and corrosion of the terminals. Inspect cables for worn spots or breaks in the insulation and for broken cable terminals.

Clean any batteries that show signs of corrosion at the terminals or which electrolyte has overflowed onto during charging. Use a baking soda solution to clean the batteries, taking care not to get the solution inside the cells. Rinse thoroughly with clear water. Clean battery and cable contact surfaces to a bright metal finish whenever a cable is removed.

Battery Charging

CAUTION

Charge the batteries at the end of each work shift or sooner if the batteries have been discharged.

Charge batteries in a well ventilated area.

Do not charge batteries when the work platform is in an area containing sparks or flames.

Permanent damage to batteries will result if batteries are not immediately recharged after discharging.

Never leave charger operating unattended for more than two days.

Never disconnect cables from batteries when charger is operating.

Keep charger dry.

1. Check battery fluid level. If electrolyte level is lower than 3/8 in. [10mm] above plates add distilled water only.
2. The plug for the battery charger is located at the right side of the power module. Connect extension cord (1.5 mm² [12 gauge] conductor minimum and 15 m [50 ft.] in length maximum) to the charger plug. Connect other end of extension cord to properly grounded outlet of proper voltage and frequency.

NOTE: Charger circuit must be used with a GFI (Ground Fault Circuit Interrupt) electrical socket.

3. Charger turns on automatically after a short delay. The ammeter will indicate charging current.

NOTE: Do not operate the machine while it is plugged into the charger

4. Charger turns off automatically when batteries are fully charged.

Figure 3-5: **Batteries and Charger**

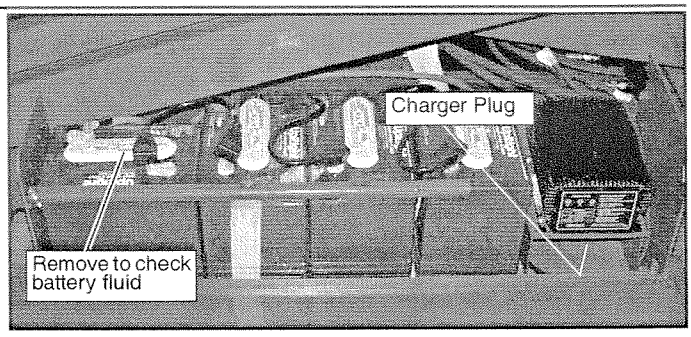

3.7 Switch Adjustments

Proximity

Figure 3-6: Proximity Switch

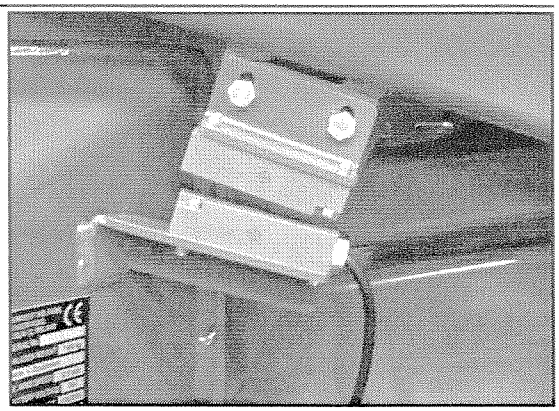

The proximity switch is located on the left side of the chassis above the drive wheel. When the machine is lowered high speed drive is available. When the machine is raised the machine will drive at creep speed.

Tilt Sensor

Figure 3-7: Tilt Sensor

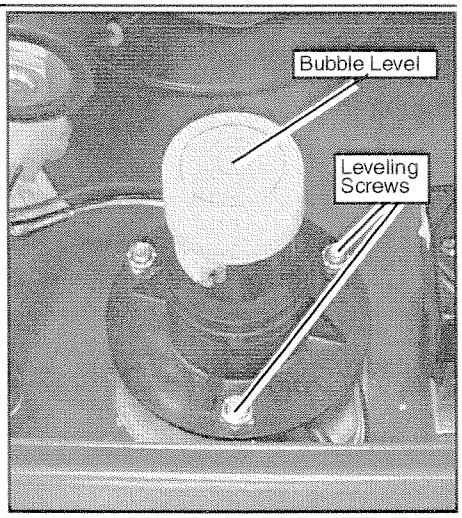

Introduction

The tilt sensor has three wires; red-power (24 v in), black-ground, white-output (24 v out). To verify the sensor is working properly there is a red LED under the sensor that lights up when the sensor is not level.

Adjustment

1. Place machine on firm level surface ± ¼°(.25°).
2. Use the Inclinometer (P/N: 10119-000-00) to ensure front and rear of chassis is level ± ¼°(.25°).
3. Adjust the three leveling screws until the bubble is centered in the inner circle.

PQ Control Handle

Figure 3-8: PQ Control Handle

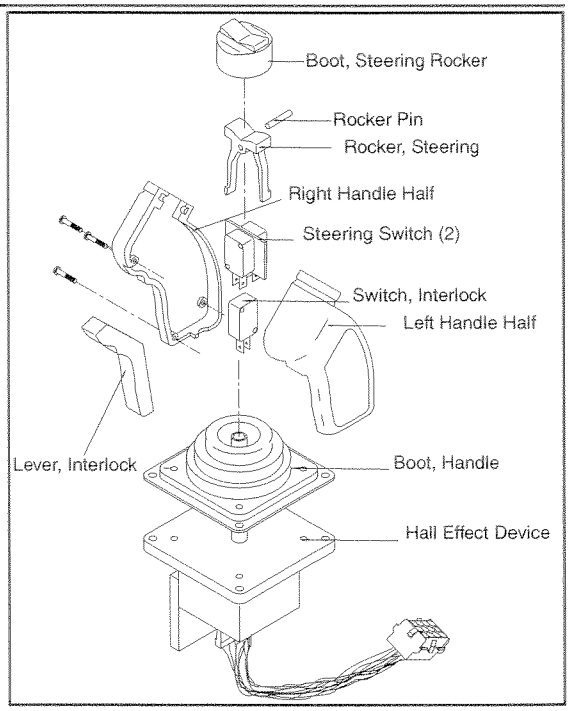

1. Remove Handle if necessary from Platform Control box.
2. Remove and replace defective parts. Refer to Section 6 for repair parts numbers.

3.8 Motor Controller and I/O Board Dip Switch Settings

NOTE: Before dip switch settings will take effect, power must be disconnected or Emergency Stop switches must be depressed.

Controller

Figure 3-9: Controller

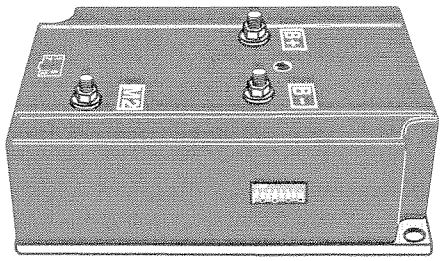

	1	2	3	4	5	6	7	8
TM12	off	off	off	on	off	on	off	on
MX15/19	off	on	off	on	off	on	off	on
X/20N	on	off	off	on	off	on	off	on
X20W	on	off	off	on	off	on	off	on
X26/31	on	on	off	on	off	off	off	on
SL20	on	off	off	on	off	on	off	on

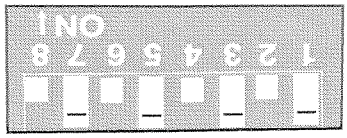

The above table shows the default dip switch settings on the controller box when the machine leaves the factory. The following adjustments may be made to these settings:

Switches 3 & 4 determine the elevated "creep" speed. If the machine does not operate at the specified speed at the default settings, use the following table to adjust the dip switch settings.

	3	4
1(slowest)	off	off
2	on	off
3 (default)	off	on
4 (fastest)	on	on

Switches 5 & 6 determine the deceleration time. Switch 5 is for the deceleration rate while the platform is lowered. Switch 6 is for the elevated rate.

Decel	5	6
.24 sec.	off	off
1.27 sec.	on	on

I/O Board

Figure 3-10: I/O Board

	1	2	3	4
TM12	off	off	off	off
MX15/19	off	off	off	off
X/20N	off	off	off	off
X20W	off	off	off	off
X26/31	off	off	off	off
SL20	off	off	off	off

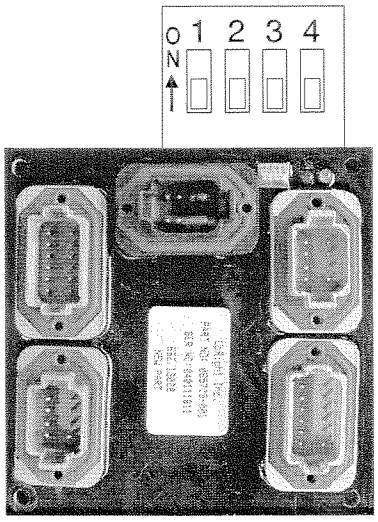

The above table shows the default dip switch settings on the I/O board when the machine leaves the factory. Switches three and four work together to determine the optional alarm settings.

1	2	3	4	Result
on				Two Speed Mode (not used)
off				Proportional Control
	on			not used
	off			Pothole Mechanism extends when platform is raised
		off	off	Down alarm only
		on	off	Down and Reverse alarm
		off	on	Drive and Down alarm
		on	on	All Motion alarm

3.9 Lubrication

The SL20 is designed with maintenance free bearings. Only the right and left kingpins require lubriation, this can be done via the grease points on the steering bosses.

3.10 Hydraulic Oil Tank and Filter

Fluid Level

The fluid level is visible on the dip stick when removed from the hydraulic tank. Oil level should read MAX when the machine is fully stowed. DO NOT fill above the upper line or when the platform is elevated.

Oil and Filter Replacement

1. Operate the work platform for 10-15 minutes to bring the hydraulic oil up to normal operating temperature

⚠ CAUTION

The hydraulic oil may be of sufficient temperature to cause burns. Wear safety gloves and safety glasses when handling hot oil

2. Provide a suitable container to catch the drained oil. Hydraulic tank has a 15 L (4 U.S. gal) capacity.
3. Remove the drain plug under the tank and allow all oil to drain.
4. Clean the magnetic drain plug and reinstall.
5. Fill the hydraulic reservoir.
6. Unthread the filter.
7. Apply a thin film of clean hydraulic oil to the gasket of the replacement filter.
8. Thread the replacement filter until the gasket makes contact, then rotate the filter 3/4 of a turn further.

Figure 3-11: **Hydraulic Oil Tank and Filter**

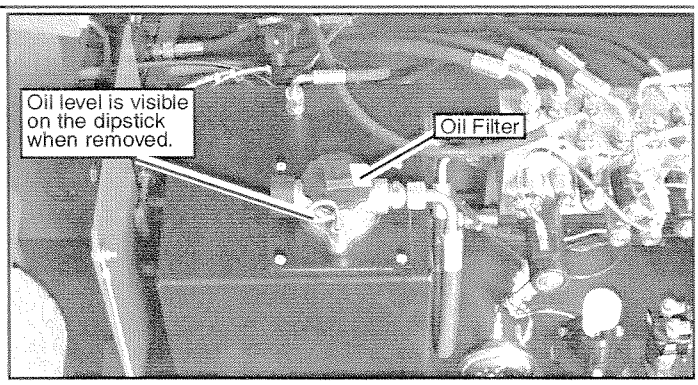

3.11 Setting Hydraulic Pressures

See "Hydraulic Manifold" on page 12 for the location of the relief and overcenter valves on the hydraulic manifold.

Check the hydraulic pressures whenever the pump, manifold or relief valve have been serviced or replaced.

⚠ WARNING

The hydraulic oil may be of sufficient temperature to cause burns. Wear safety gloves and safety glasses when handling hot oil.

The oil in the hydraulic system is under very high pressure which can easily cause severe cuts. Obtain medical assistance immediately if cut by hydraulic oil.

Figure 3-12: Hydraulic Manifold

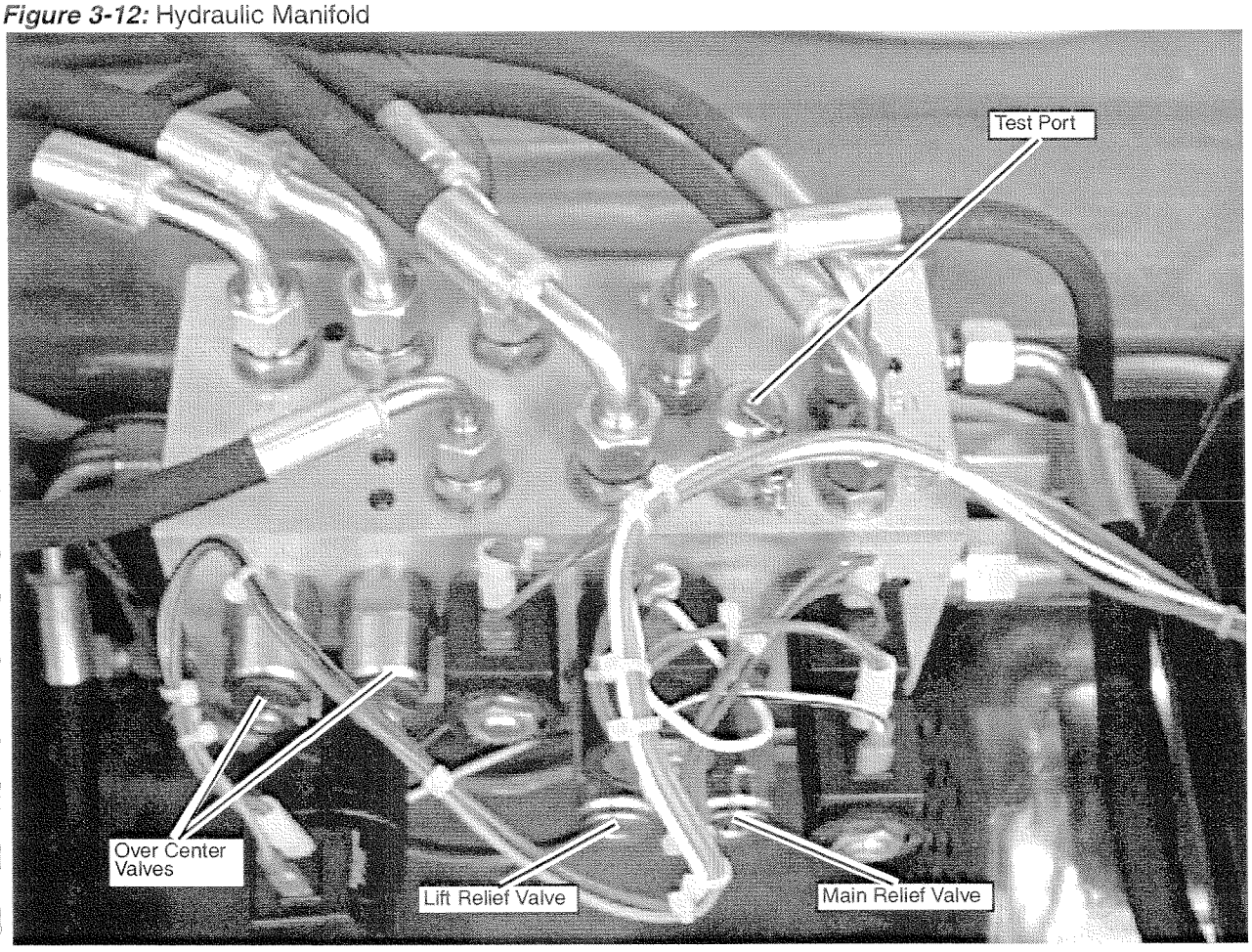

Main Relief Valve

1. Operate the work platform for 10-15 minutes to bring the hydraulic oil up to normal operating temperature.
2. Remove the control module cover and install a gauge in pressure gauge port.
3. Loosen locknut or remove cover on the main relief valve and turn adjusting screw counter-clockwise two full turns.
4. Remove the platform controller so that the machine may be operated from the ground. With the platform empty, attempt to drive the machine up a 25% (14°) grade. Adjust the main relief valve screw until the machine is just able to climb the slope. The pressure gauge should read approximately 207 bar (3000 psi).
5. Tighten locknut or replace steering relief valve cover and torque to 8 Nm (6 Ft/Lbs).
6. Remove gauge and replace cap.

Steering Relief Valve

1. Operate the work platform for 10-15 minutes to bring the hydraulic oil up to normal operating temperature.
2. Install gauge in pressure gauge port.
3. Loosen locknut or remove cover on the steering relief valve and turn adjusting screw counterclockwise two full turns.
4. While one person holds the steering switch to steer the wheels fully to the left, slowly turn the steering relief valve adjusting screw clockwise to increase the pressure until the gauge reads 104 bar (1500 psi).
5. Tighten locknut or replace main relief valve cover and torque to 8 Nm (6 Ft/Lbs).
6. Remove gauge and replace cap.

Lift Relief Valve

1. Operate the machine 10-15 minutes to warm the oil.
2. Loosen the locknut or remove the cover on the lift relief valve and turn the adjusting screw counterclockwise two full turns.
3. Place the maximum rated load (see "Specifications", page 2-10) on the platform.
4. Turn the chassis lift switch to LIFT position and hold it there.
5. Slowly turn the lift relief valve adjusting screw clockwise to increase the pressure until the platform just begins to rise. The pressure should be approximately 138 bar (2000 psi)
6. Release the chassis lift switch. Tighten locknut or replace lift relief valve cover.

Overcenter Valve

1. Operate the work platform for 10-15 minutes to bring the hydraulic oil up to normal operating temperature.
2. Remove pressure gauge port cap and install the pressure gauge assembly.
3. Disconnect proximity switch.
4. Lift work platform and block front wheels off ground.
5. Loosen the locknut on overcenter valve.
6. With the chassis key switch on DECK and the drive/lift switch in DRIVE, depress the interlock lever and slowly pull the control lever to REVERSE to drive the wheels.
7. Adjust the overcenter valve by turning the adjustment screw until the pressure gauge indicates 55 to 69 bar (800 to 1000 psi).
8. Tighten locknut on valve to 8 Nm (6 Ft/Lbs).
9. Check the setting by slowly moving the control lever FORWARD, then REVERSE checking the gauge to ensure pressures are properly set. Readjust as needed.
10. Remove block and lower work platform to ground.
11. Reconnect the proximity switch.
12. Remove the gauge from the gauge port and reinstall cap.
13. Check for proper operation of the drive system and brake.

NOTES:

3.12 Hydraulic Manifold

Though it is not necessary to remove the manifold to perform all maintenance procedures, a determination should be made as to whether or not the manifold should be removed before maintenance procedures begin.

Removal

1. Remove the battery ground cable.
2. Tag and disconnect the solenoid valve leads from the terminal strip.
3. Tag, disconnect, and plug hydraulic hoses.
4. Remove the locknuts, jam nut, and bolts that hold the manifold to the mounting bracket.
5. Remove manifold block.

Disassembly

NOTE: Mark all components as they are removed so as not to confuse their location during assembly. Refer to Figure 3-13 often to aid in disassembly and assembly.

1. Remove coils from solenoid valves.
2. Remove solenoid valves, relief valves and overcenter valves.
3. Remove fittings, plugs, and springs.

Cleaning and Inspection

1. Wash the manifold in cleaning solvent to remove built up contaminants and then blow out all passages with clean compressed air.
2. Inspect the manifold for cracks, thread damage and scoring where o-rings seal against internal and external surfaces.
3. Wash and dry each component and check for thread damage, torn or cracked o-rings and proper operation.
4. Replace any parts or o-rings found unserviceable.

Assembly

NOTE: Lubricate all o-rings before installation to prevent damage to o-rings.

1. Install fittings, plugs, and springs.
2. Install overcenter valves, main relief valve, steering relief valve, and solenoid valves.

NOTE: Torque cartridge valves to 34 N-m (25 ft. lbs.).

3. Install coils on solenoid valves.

NOTE: Torque coil retaining nuts to 5.4-6.8 Nm (4-5 ft. lbs) maximum.

Installation

1. Attach manifold assembly to mounting plate with bolts, washers, jam nut and locknuts.

NOTE: Bolt at the left end of the valve is installed from the bottom and is secured with the jam nut. Secure all ground wires with locknut to this bolt.

2. Connect solenoid leads to terminal strip (as previously tagged).
3. Connect hydraulic hoses. Be certain to tighten hoses to manifold (se eTabl e3-2) on page 3-21.
4. Operate each hydraulic function and check for proper function and leaks.

Figure 3-13: **Hydraulic Manifold, Exploded View**

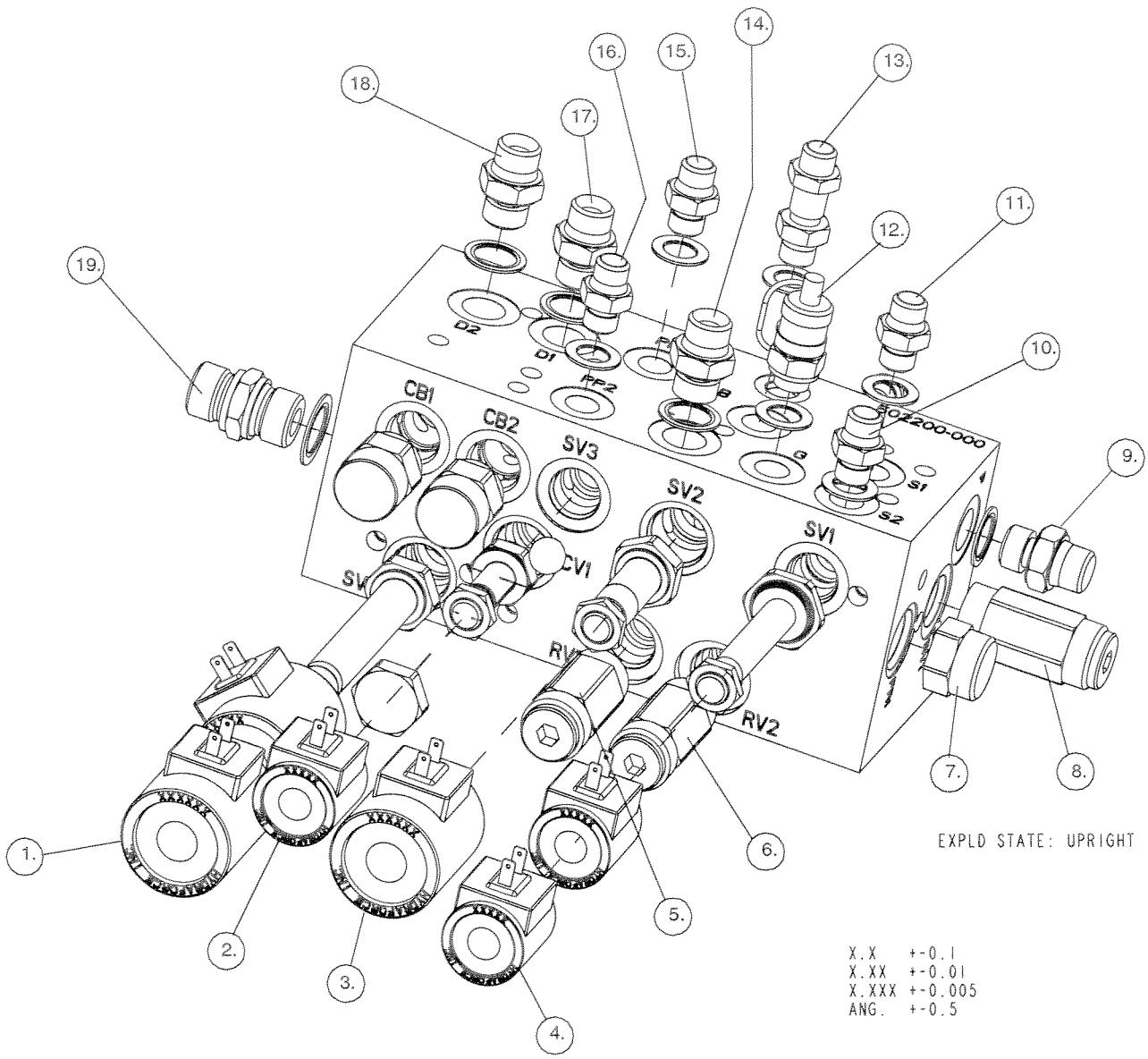

1. Drive valve and soledoids.
2. Pothole valve and solenoid
3. Lift valve and solenoid
4. Steering valve and solenoids
5. Lift relief valve
6. Main relief valve
7. Steering flow regulator
8. Steering relief valve
9. 3/8 BSP fitting
10. 1/4 BSP fitting
11. 1/4 BSP fitting
12. Test port
13. 3/8 BSP fitting
14. 1/4 BSP fitting
15. 1/4 BSP fitting
16. 1/4 BSP fitting
17. 3/8 BSP fitting
18. 3/8 BSP fitting
19. 1/2 BSP fitting

3.13 Hydraulic Power Unit

Removal

NOTE: If the hydraulic tank has not been drained, suitable means for plugging the hoses should be provided to prevent excessive fluid loss.

Figure 3-14: **Hydraulic Power Unit**

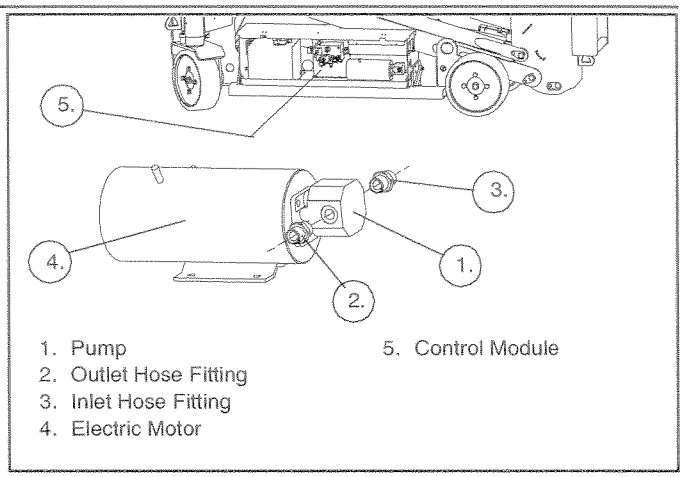

1. Disconnect the negative battery cable.
2. Mark, disconnect, and plug the hose assemblies.
3. Mark and disconnect the motor cables.
4. Loosen the capscrews and remove the power unit from the control module.

Installation

1. Place the power unit into the control module. secure the jubile clip through the slots and around the unit.
2. Unplug and reconnect the hydraulic hoses. Reconnect the motor cables and negative battery cables.
3. Check the oil level in the hydraulic tank before operating the work platform.

3.14 Hydraulic Drive Motors and Hubs

Figure 3-15: **Hydraulic Drive Motor**

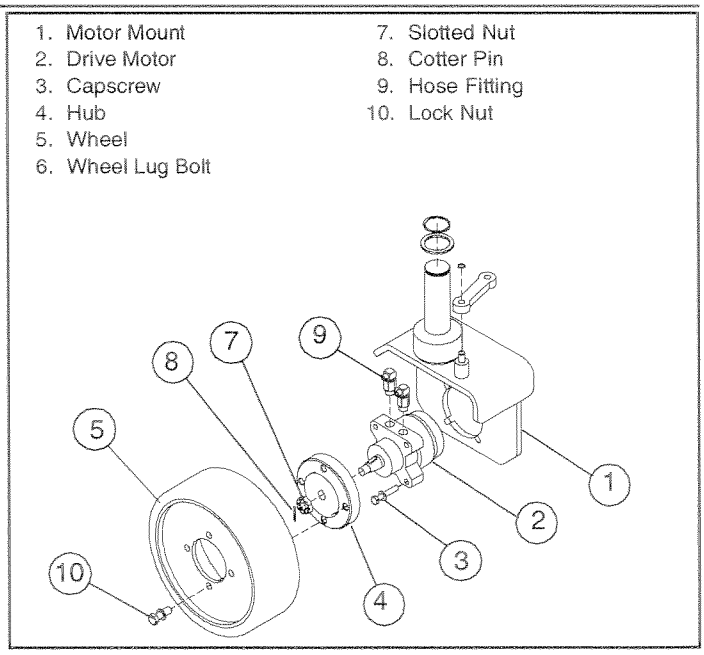

Removal

1. Park the work platform on firm level ground then block the wheels to prevent the work platform from rolling.
2. Loosen the wheel lug bolts on the front corner to be raised.
3. Use a 1.3 metric ton (1.5 imperial ton) capacity jack to raise the desired corner. Position blocks under the raised corner to prevent the work platform from falling if the jack fails.
4. Remove the wheel lug bolts and wheel.
5. Remove the cotter pin, slotted nut, and hub. If necessary use a wheel puller to remove the hub.

NOTE: Before disconnecting hoses, thoroughly clean off all outside dirt around fittings. (After disconnecting hoses and before removing from vehicle, IMMEDIATELY plug port holes.)

6. Tag, disconnect, and plug the hose assemblies to prevent foreign material from entering.
7. Remove the locknuts, capscrews, and drive motor from the motor mount.

INSTALLATION

1. Referring to Figure 3-15, position the drive motor in the motor mount and secure with capscrews and locknuts. Torque to 102 N-m (75 ft.lbs.).
2. Remove the plugs from the hose assemblies and connect to the drive motor.
3. Install the hub and slotted nut. Torque the locknut to 190-217 N-m (140 to 160 ft. lbs.). Install a new cotter pin. Do not back-off the nut to install the cotter pin.
4. Install the wheel with lug bolts onto the hub. Torque to 108 N-m (80 ft. lbs.).
5. Remove blocks. Lower the jack and remove. Operate the drive system and check for leaks.
6. Drive machine for 20 minutes and retorque wheel lug bolts and check for leaks.
7.

3.15 STEERING CYLINDER

REMOVAL

1. Mark and disconnect the hose assemblies from the fittings and immediately cap the openings to prevent foreign material from entering.
2. Remove the retaining rings and the steering pins from both ends of the steering cylinder.
3. Remove the steering arms from both ends of the steering cylinder.
4. Remove the locknuts and capscrews from the steering bearing flanges.
5. Slide the steering cylinder out of the chassis.

Figure 3-16: Steering Cylinder

DISASSEMBLY

1. Unscrew the heads from the cylinder.
2. Pull the rod from the cylinder.
3. Remove all seal kit components from the head and piston.

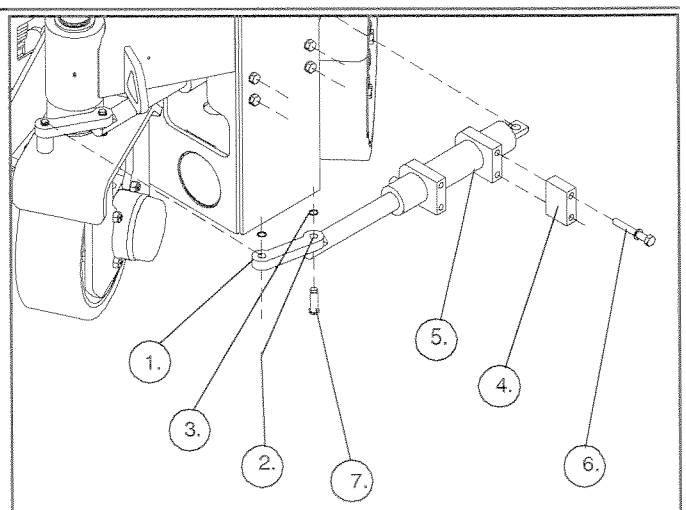

1. Steering Arm
2. Bearing
3. Circlip
4. Mounting block
5. Steering Cylinder
6. Bolt & washer
7. Pin

Cleaning and Inspection

1. Wash all the metal parts in cleaning solvent and blow dry with filtered compressed air.
2. Inspect all the threaded components for stripped or damaged threads.
3. Check the inside surface of the cylinder barrel for scoring or excessive wear.
4. Check the piston and headcap for scoring or excessive wear.
5. Inspect the surface of the shaft for scoring or excessive wear.

Assembly

1. Lubricate and install the seal on the piston.
2. Lubricate and install the rod wiper, rod seal and static seal onto the head.
3. Carefully push the rod assembly into the cylinder.
4. Screw the head into the cylinder.

Installation

1. Installation is reverse of removal.
2. Cycle the cylinder several times to remove air from system.
3. Check all connections for leaks.

3.16 Lift Cylinder

Removal

1. Block Elevating Assembly (Figure 3-4), page 3 - 4 .
2. Provide a suitable container to catch the hydraulic fluid, then disconnect the hydraulic hoses. Immediately plug hoses to prevent foreign material from entering.
3. Remove the set screw from end of cylinder rod.
4. Place a 61 cm (2 ft.) long plank, at least 25 mm ((1 in.) thick, across the top of the modules.
5. Support rod end of cylinder and remove rod end cylinder pin and let cylinder down to rest on the plank.
6. Support the lower tension links.
7. Attach a suitable hoisting device and sling to the cylinder.
8. Support the cylinder so the barrel end cylinder pin can be removed. Remove the pin, then lift the cylinder from the machine with the hoisting device.
9. Move cylinder to a prepared work area.

Disassembly

1. Remove the set screw which secures the cylinder head.
2. Unscrew the head from the cylinder.
3. Pull the rod assembly out of the cylinder.
4. Remove the seal kit components from the head and piston.
5. Check the end bearing for wear. Remove and replace it if necessary.

Cleaning and Inspection

1. Clean all metal parts in solvent and blow dry with filtered compressed air.
2. Check all threaded parts for stripped or damaged threads.
3. Check the bearing surfaces inside of the headcap, the outer edge surface of the piston, inside the cylinder barrel, and the shaft for signs of scoring or excessive wear.
4. Replace any parts found unserviceable.

Reassembly

1. Lubricate and install the wear rings and seal on the piston.
2. Lubricate and install the static seal, rod seal and rod wiper on the head.
3. Carefully slide the rod assembly into the cylinder.
4. Screw the head into cylinder and secure it with the set screw.

Installation

NOTE: Before installing the lift cylinder check the cylinder pins and bearings for wear and replace if necessary.

1. Place two 61 cm (2 ft.) long planks, at least 25 mm (1 in.) thick, across the top of the modules.
2. Place the lift cylinder on the planks.
3. Lift the lower tension links into position.
4. Lift the barrel end of the cylinder into place and push the cylinder pin in until approximately 38 mm (1½ in.) is still exposed.

NOTE: Take care in aligning the holes so that the pin can be pushed in by hand. If holes are not properly aligned and the pin is forced in, the bearings will be damaged.

5. Install anti-rotation pin into cylinder pin aligning with the hole in the lower tension link and push the cylinder pin completely in. Secure it with the set screw.
6. Lift the rod end of cylinder into place and insert pin. Install anti-rotation pin into rod-end pin aligning it with the hole in the upper boom and push the cylinder pin in completely. Secure it with the set screw.

7. Cycle lift cylinder several times to remove air from the system and to check for proper operation.
8. Test with weight at rated platform load to check system operation.

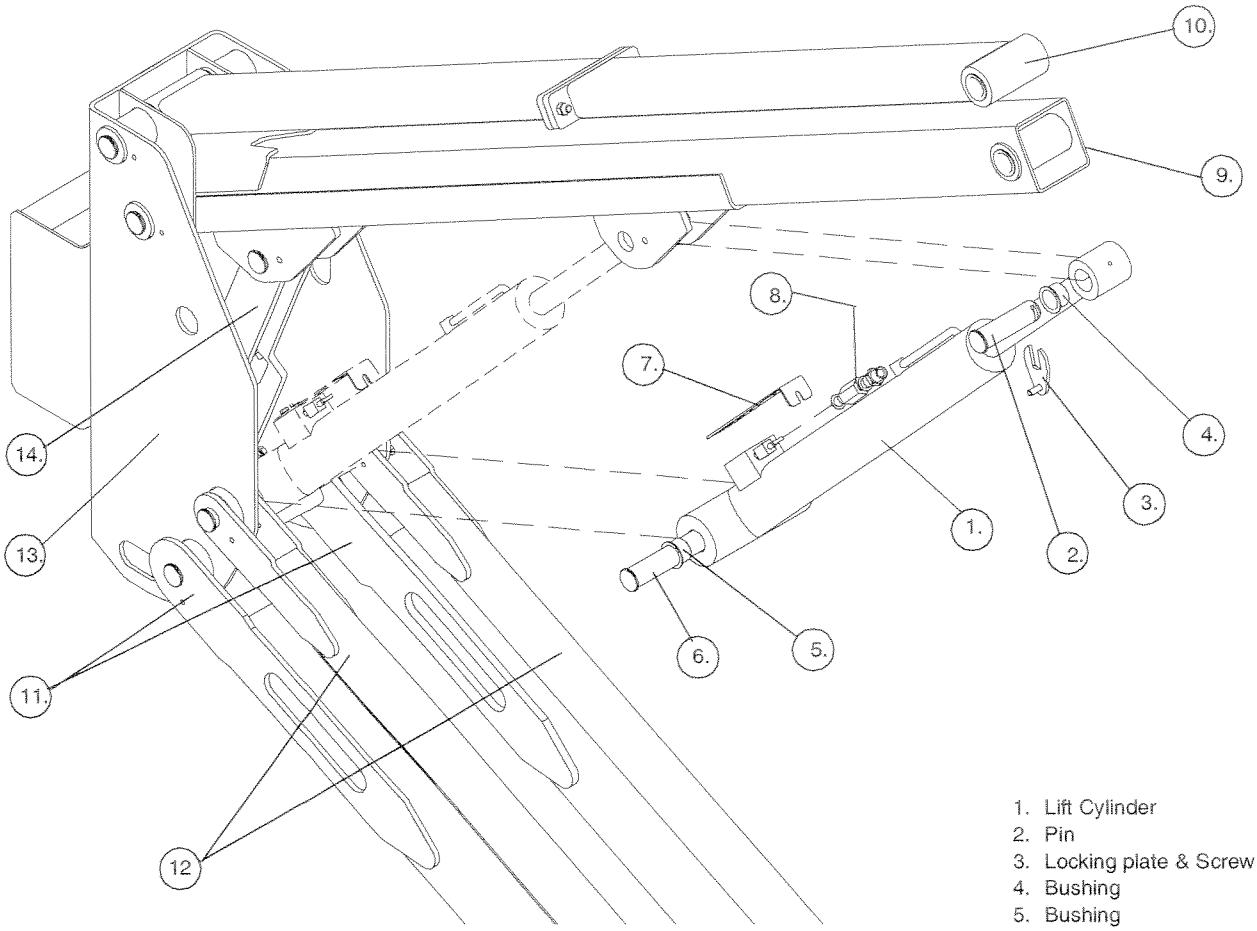

1. Lift Cylinder
2. Pin
3. Locking plate & Screw
4. Bushing
5. Bushing
6. Pin
7. Bracket, Emergency Down
8. Orifice
9. Upper boom
10. Compression tube
11. Lower booms
12. Tension links
13. Riser
14. Tension link weldment

3.17 Pothole Cylinder

Figure 3-17: Pothole Mechanism Cylinder Installation

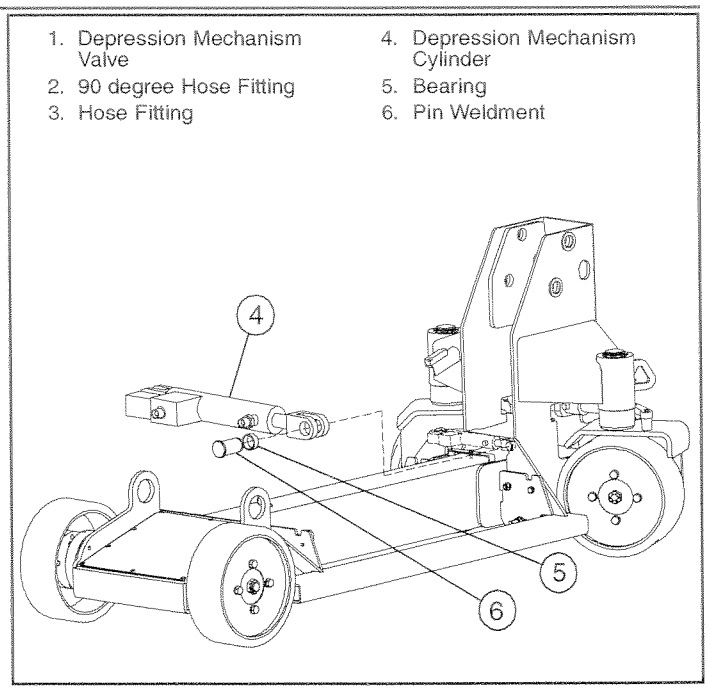

Removal

1. Mark and disconnect the hose assemblies from the fittings and immediately cap the openings to prevent foreign material from entering.
2. Support the pothole weldments on each side with wood blocks.
3. Remove the cotter pin and the pin weldment from each end of the cylinder.
4. Lift the cylinder out of the unit and move to a prepared work area.

Disassembly

1. Unscrew the head from the cylinder.
2. Pull the rod assembly from the cylinder.
3. Remove the seal kit components from the head and piston.

Figure 3-18: Depression Mechanism Assembly

Cleaning and Inspection

1. Wash all the metal parts in cleaning solvent and blow dry with filtered compressed air.
2. Inspect all the threaded components for stripped or damaged threads.
3. Check the inside surface of the cylinder barrel for scoring or excessive wear.
4. Check the piston and headcap for scoring or excessive wear.
5. Inspect the surface of the shaft for scoring or excessive wear.

Assembly

1. Lubricate and install the seal on the piston.
2. Lubricate and install the rod wiper, rod seal and static seal onto the head.
3. Carefully push the rod assembly into the cylinder.
4. Screw the head into the cylinder.

Installation

1. Installation is reverse of removal.
2. Cycle the cylinder several times to remove air from system.
3. Check all connections for leaks.

Pothole System Adjustment

1. Place machine on firm level surface ± ¼°.
2. Raise the machine to access the level sensor.
3. Center level sensor bubble by turning adjustment screws on level sensor (Figure 3-7).
4. Set proximity switch to de-activate at 1.6 m (6 ft.) platform height.
5. Check that pothole protectors are fully deployed before limit switch de-activates when lifting.
6. Check pothole system operation.
   a. Machine should not elevate above 1.6 m (6 ft.) while on a 2° slope.
   b. Machine should have low speed drive when limit switch is de-activated and machine is level.
   c. Machine should have high speed drive when limit switch is activated.
   d. Tilt alarm should sound when platform is elevated above 1.6 m (6 ft.) and machine is off level by 2°.
7. Adjust the stops so that it allows 3/4° (±1/16°) ground clearance.

3.18 Adjustable Compression Tube

Support the platform using an overhead hoist.

Add shims as required to level platform ± .75° (1 1/4").

Figure 3-19: Compression Tube Assembly

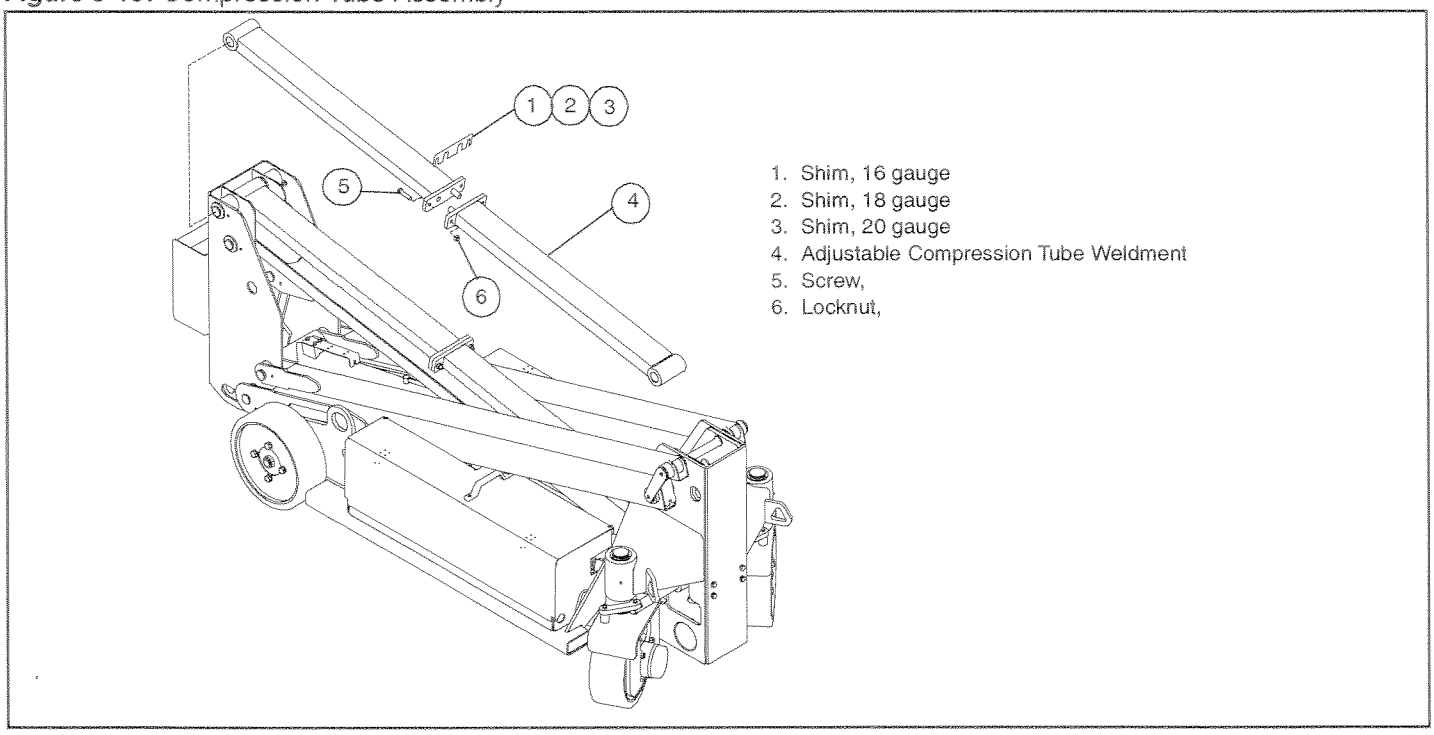

3.19 Torque Specifications

Table 3-1: Fasteners

Use the following values to torque fasteners used on UpRight Work Platforms unless a specific torque value is called out for the part being installed.

METRIC CAP SCREWS								
METRIC GRADE	8.8				10.9			
Cap Screw Size (millimeters)	8.8				10.9			
	TORQUE				TORQUE			
	Ft./Lbs.		Nm.		Ft./Lbs.		Nm.	
	MIN	MAX	MIN	MAX	MIN	MAX	MIN	MAX
M6 x 1.00	6	8	8	11	9	11	12	15
M8 x 1.25	16	20	21.5	27	23	27	31	36.5
M10 x 1.50	29	35	39	47	42	52	57	70
M12 x 1.75	52	62	70	84	75	91	102	123
M14 x 2.00	85	103	115	139	120	146	163	198
M16 x 2.50	130	158	176	214	176	216	238	293
M18 x 2.50	172	210	233	284	240	294	325	398
M20 x 2.50	247	301	335	408	343	426	465	577
M22 x 2.50	332	404	450	547	472	576	639	780
M24 x 3.00	423	517	573	700	599	732	812	992
M27 x 3.00	637	779	863	1055	898	1098	1217	1488
M30 x 3.00	872	1066	1181	1444	1224	1496	1658	2027

NOTE: These values apply to fasteners as received from the supplier, dry or when lubricated with normal engine oil. They do not apply if special graphited or molydisulphide greases or other extreme pressure lubricants are used.

Table 3-2: Hydraulic Components

Use the following values to torque hydraulic components used on UpRight Work Platforms.

NOTE: Always lubricate threads with clean hydraulic oil prior to installation

Type: SAE Part Series	Cartridge Poppet		Fittings		Hoses	
	Ft/Lbs	Nm	Ft/Lbs	Nm	Ft/Lbs	Nm
#4	N/A	N/A	N/A	N/A	135-145	15-16
#6	N/A	N/A	10-20	14-27	215-245	24-28
#8	25-30	34-41	25-30	34-41	430-470	49-53
#10	35-40	47-54	35-40	47-54	680-750	77-85
#12	85-90	115-122	85-90	115-122	950-1050	107-119
#16	130-140	176-190	130-140	176-190	1300-1368	147-155

TROUBLESHOOTING

4.1 INTRODUCTION

The following section on troubleshooting provides guidelines on the types of problems users may encounter in the field, helps determine the cause of problems, and suggests proper corrective action.

Careful inspection and accurate analysis of the symptoms listedin the Troubleshooting Guide will localize the trouble more quickly than any other method. This manual cannot cover all possible problems that may occur. If a specific problem is not covered in this manual, call us at the number listed below.

Referring to Section 2.0 and 5.0 will aid in understanding the operation and function of the various components and systems of the SL20 and help in diagnosing and repair of the machine.

GENERAL PROCEDURE

Thoroughly study hydraulic and electronic schematics in **Section 5**. Check for loose connections and short circuits. Check/repair/replace each component in theTruth Table which is listed under each machine function which does not operate properly.

Use the charts on the following pages to help determine the cause of a fault in your UpRight SL20.

NOTE: Spike protection diodes at components have been left out of the charts to eliminate confusion..

⚠ WARNING

When troubleshooting, ensure that the work platform is resting on a firm, level surface.

Unplug the machine or disconnect the battery when replacing or testing the continuity of any electrical component.

UPRIGHT Tel: 353-1-620-9300
FAX: 353-1-620-9301

4.2 Troubleshooting

1. Verify your problem.
   - Do a full function test from both platform controls and chassis controls and note all functions that are not operating correctly.
2. Narrow the possible causes of the malfunction.
   - Use the troubleshooting guide to determine which components are common to all circuits that are not functioning correctly.
3. Identify the problem component.
   - Test components that are common to all circuits that are not functioning correctly. Remember to check wires and terminals between suspect components. Be sure to check connections to battery negative.
4. Repair or replace component found to be faulty.
5. Verify that repair is complete.
   - Do a full function test from both platform and chassis controls to verify that all functions are operating correctly and machine is performing to specified values

Special Tools

Following is a list of tools which may be required to perform certain maintenance procedures on the UpRight SL20.

- Inclinometer (UpRight P/N 010119-000)
- Crimping Tool (UpRight P/N 028800-009)
- Terminal Removal Tool
  (UpRight P/N 028800-006)

Adjustment Procedures

Hydraulic settings must be checked whenever a component is repaired or replaced. Refer to Section 3 for procedures.

Remove counter balance valves and "bench test" them if they are suspect.

Connect a pressure meter of appropriate range to the test port located on the hydraulic manifold.

Correct pressure settings are listed in the hydraulic schematic.

Checking Pump Pressures

Remove hose from pump port and connect pressure tester.

4.3 Upright Motor Controller Diagnostics

Batteries must be fully chargesd before troubleshooting.

Check/Repair all connections before replacing any components

Table 4-1: LED Fault Codes

Flash Code	Status	Corrective Action
LED on	The controller is operational.	None.
LED off	There is no power to the controller. The fault is internal.	Replace the controller.
2 Flash	Procedural fault. Lift, drive, or steer switch is engaged at startup, or lift and steer are attempted at the same time.	Turn the chassis key switch to off. Make sure that the control handle and steering switch are in neutral. Turn Chassis key switch on.
3 Flash	Permanently low power output from M2 t.erminal	Replace the controller.
4 Flash	Permanently high power output at M2 terminal.	Check/Replace motor contact. Check/Replace motor.
5 Flash	Power output at M2 terminal does not match the position of the control handle (i.e. High output when handle is in neutral, or low output when movement is attempted).	Check/Replace motor contact. Check/Replace controller. Check/Replace motor
6 Flash	Control handle fault.	Check/Replace control handle
7 Flash	Battery voltage fault. Voltage has dropped below 12 volts or exceeded 45 volts	Turn Chassis Key Switch off. Make sure that the control handle and steering switch are in neutrol. Turn Chassis Key Switch on. Drive slowly to charging station.
8 Flash	Thermal fault. Heat sink temperature has exceeded 80 degrees Celsius.	Automatically clears when controller cools.

Figure 4-1: Motor Controller

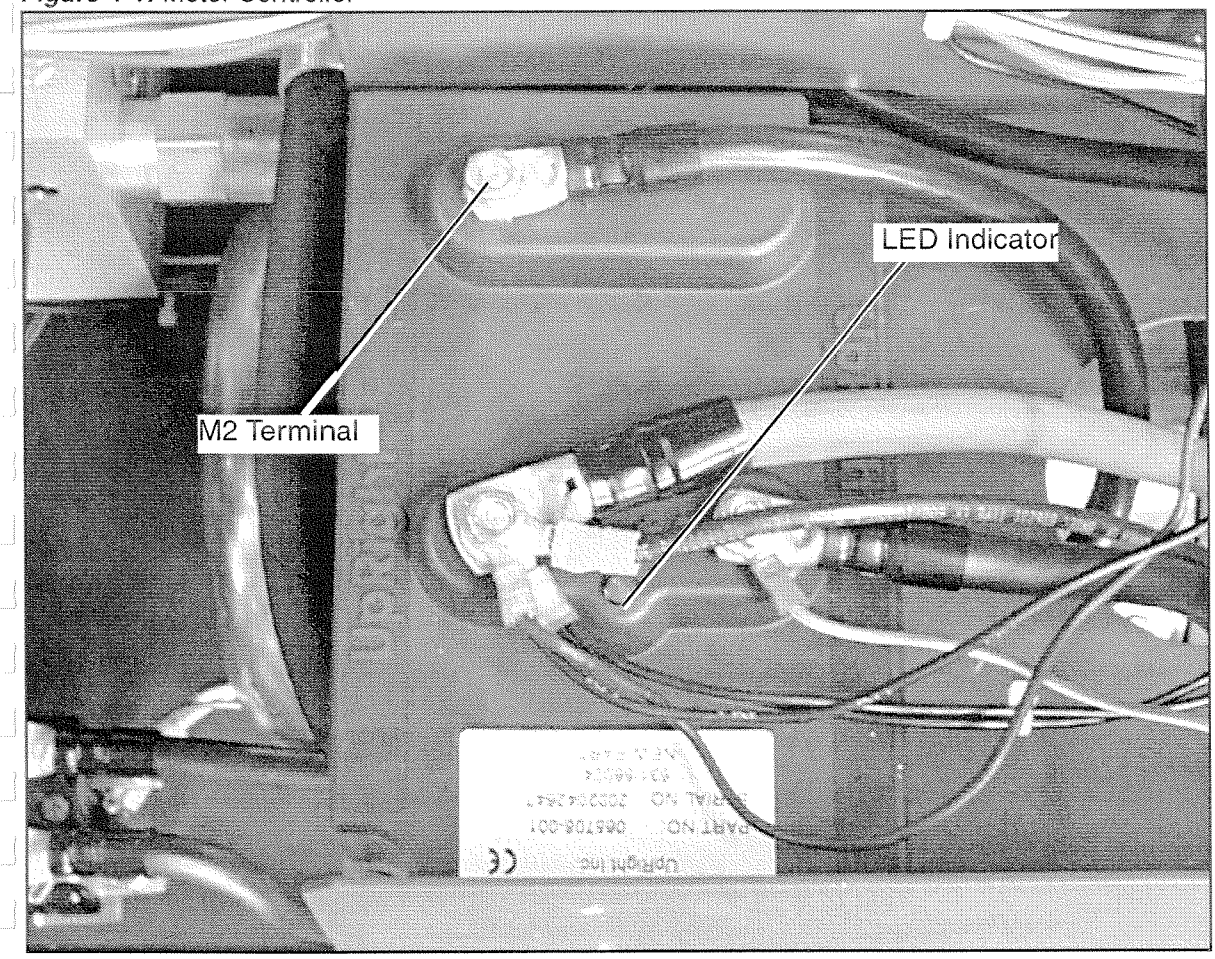

4.4 Measured Voltage at I/O Board

Table 4-2: Circuit Board Connectors

CONNECTOR	PIN NUMBER	DESCRIPTION
J1	1	24 Volts = Lift Mode Active / 0 Volts = Lift Mode inactive
	2	No Connection
	3	24 Volts = Drive Allowed / 0 Volts = Drive Not Allowed
	4	24 Volts from Lower E-Stop / Lower E-Stop Not Depressed
	5	24 Volts from Upper E-Stop / Lower and Upper E-Stops Not Depressed
	6	24 Volts Out to Interlock Lever when Upper Controls Selected & Upper/Lower E-Stops Not Depressed
	7	No Connection
	8	24 Volts = Drive Forward or Lift Up / 0 Volts = Stop Drive Forward or Lift Up
	9	24 Volts = Drive Reverse or Lift Down / 0 Volts = Stop Reverse Drive or Lift Down
	10	Accelerator Input / 20K Pot / 3.5 Volts to 0 Volts, Minimum to Maximum Speed
	11	24 Volts = Steer Left / 0 Volts = Stop Steer Left
	12	24 Volts = Steer Right / 0 Volts = Stop Steer Right.
J2	1	Goes to 0 Volts to Activate Depression Mechanism Extend Solenoid / 24 Volts = Solenoid OFF
	2	No Connection
	3	24 Volt Supply for Solenoids
	4	Goes to 0 Volts to Activate Forward Solenoid / 24 Volts = Solenoid OFF
	5	Goes to 0 Volts to Activate Reverse Solenoid / 24 Volts = Solenoid OFF
	6	Goes to 0 Volts to Activate Lift Up Solenoid / 24 Volts = Solenoid OFF
	7	Goes to 0 Volts to Activate Steer Left Solenoid / 24 Volts = Solenoid OFF
	8	Goes to 0 Volts to Activate Steer Right Solenoid / 24 Volts = Solenoid OFF
J3	1	Goes to 0 Volts to Activate Alarm / 24 Volts = Alarm OFF
	2	24 Volts = Tilt Inactive / 0 Volts = Tilt Active
	3	24 Volt Supply for Alarm, Tilt Sensor, Lift Down and Depression Mechanism Retract Solenoids
	4	24 Volts = Below Height Limit / 0 Volts = Above Height Limit
	5	Goes to 0 Volts to Activate Lift Down Solenoid / 24 Volts = Solenoid OFF
	6	Goes to 0 Volts to Activate Depression Mechanism Solenoid / 24 Volts = Solenoid OFF
	7	24 Volts = High Speed Active / 0 Volts = Low Speed Active
	8	Battery Negative Supply for Tilt Sensor
J4	1	Goes to 0 Volts to Activate Line Contactor / 24 Volts = Line Contactor OFF
	2	Supplies 24 Volts to Upper Control / Lower Control Switch
	3	24 Volts = Lower Control Mode
	4	Supplies 24 Volts to Ground Lift Switch when in Lower Control Mode
	5	24 Volt Supply Output
	6	Goes to 0 Volts to Activate Hour Meter / 24 Volts = Hour Meter Not Activated
	7	24 Volts = Lift Up from Ground Control / 0 Volts = Lift Up OFF
	8	24 Volts = Lift Down from Ground Control / 0 Volts = Lift Down OFF
	9	24 Volt Supply Input from Battery via Lower E-Stop / Lower E-Stop Not Depressed
	10	24 Volts from Upper Control Switch / 24 Volts = Upper Control Mode
	11	Battery Negative Input to I/O Board
	12	24 Volt Supply for Hour Meter and Line Contactor
J5	1	24 Volts power to Pin 1 of SC1000 (Key ON Power)
	2	24 Volts = Command Controller to Drive / 0 Volts = Stop Controller Drive
	3	24 Volts = Command Controller to Steer / 0 Volts = Steer OFF
	4	24 Volts = Command Controller to Lift / 0 Volts = Stop Lift
	5	24 Volts = Command Normal Speed / 0 Volts = Command Speed Cutback
	6	24 Volts = Line Contactor OFF / 0 Volts = Line Contactor ON
	7	24 Volts = No Direction Solenoid Allowed / 0 Volts = Direction Solenoid Allowed to Activate
	8	Accelerator 3.5 Volts to 0 Volts / Minimum to Maximum Speed

4.5 Electrical Troubleshooting

Table 4-3: Troubleshooting Guide: Electrical Schematics

Component / Function	Lower Controls	Upper Controls	Drive Forward	Drive Reverse	High Speed/Creep	Raise Platform	Lower Platform	Steer Left	Steer Right	Depression Mechanism Extend	Depression Mechanism Retract	Brakes	Tilt Alarm	Down Alarm	Battery Charge
Alarm															
Batteries	X	X	X	X	X	X	X	X	X	X	X	X	X	X	
Battery Charger															X
15 AMP Circuit Breaker	X	X	X	X	X	X	X	X	X	X	X	X	X	X	
175 AMP Fuse	X	X	X	X	X	X	X	X	X	X	X	X			
Hour Meter/Low Voltage indicator															
I/O Board	X	X	X	X	X	X	X	X	X	X	X	X	X	X	
Motor Control	X	X	X	X	X	X	X	X	X	X	X	X			
Motor	X	X	X	X	X	X	X	X	X	X	X	X			
Motor Relay	X	X	X	X	X	X	X	X	X	X	X	X			
Chassis Emergency Stop Switch	X	X	X	X	X	X	X	X	X	X	X	X	X	X	
Chassis Lift Switch						X	X								
Chassis Key Switch	X	X	X	X	X	X	X	X	X	X	X	X	X	X	
Lift/Drive Selector Switch		X	X	X		X	X								
Limit Switch					X										
Platform Emergency Stop Switch	X	X	X	X	X	X	X	X	X	X	X	X	X	X	
Interlock Switch	X	X	X	X	X	X	X	X	X	X	X				
PQ Control Handle		X	X	X		X	X								
Loading Clearance Lowering Switch							X								
Platform Steering Switch (2)								X	X						
Tilt Sensor	X	X	X	X	X	X	X	X	X	X	X	X	X	X	
Steering Solenoid (right)									X						
Steering Solenoid (left)								X							
Platform Lift Solenoid						X									
Reverse Solenoid				X											
Forward Solenoid			X												
Depression Mechanism Extension Solenoid										X					
Down Solenoid							X								
Depression Mechanism Retract Solenoid											X				

4.6 Hydraulic Troubleshooting

Table 4-4: Troubleshooting Guide: Hydraulic Schematic

Component / Function	Lift Platform	Lower Platform	Steer Right	Steer Left	Drive Forward	Drive Reverse	Creep	Depression Mechanism Extend	Depression Mechanism Retract	Brakes
Check Valve								X	X	
Steering Cylinder			X	X						
Lift Cylinder	X									
Depression Mechanism Cylinder								X	X	
Break Cylinder										X
Priority Flow Divider	X		X	X	X	X	X	X	X	X
Suction Strainer	X		X	X	X	X	X	X	X	
Return Filter	X		X	X	X	X	X	X	X	
Drive Motors (2)					X	X				
Pump	X		X	X	X	X	X	X	X	
Main Relief Valve	X				X	X	X	X	X	X
Steering Relief			X	X						
Tank										
Steering Right/Left Valve			X	X						
Lift Valve	X									
Down/Emergency Lowering Valve		X								
Depression mechanism Retract Valve									X	
Depression Mechanism Extend Valve								X		
Forward/Reverse Valve					X	X				
Counterbalance Valve					X	X	X			X

SCHEMATICS

5.1 INTRODUCTION

This section contains electrical and hydraulic power schematics and associated information for maintenance purposes.

The diagrams are to be used in conjunction with the ***Troubleshooting Truth Tables*** in ***Section 4.*** They allow understanding of the makeup and functions of the systems for checking, tracing, and faultfinding during troubleshooting analysis.

The components that comprise the electrical and hydraulic systems are given a reference designation and are explained as to function and location in the following tables.

CONTENTS

5.2 Electric - Model 5-2

5.3 Hydraulic Schematic 5-4

5.2 Electric - Model

Legend: Electrical Schematic, 065616-023

DESIG-NATION	NAME	FUNCTION	LOCATION
1	Alarm	Provides warning sound when slope of machine exceeds 2° side-to-side, or fore and aft and also when deck is lowering.	Control Module
2	Batteries	Provides power to work platform	Power Module
3	Battery Charger	Charges battery	Power Module
4	175 AMP Fuse	Overload protection for electric motor	Chassis Controls
5	Hour Meter/Low Voltage indicator	Shows how many hours the machine has been in use; indicates low battery voltage.	Chassis Controls
6	I/O Board	Connection point for machine function wiring	Control Module
7	Motor Control	Controls the speed of electric motor	Control Module
8	Motor	Provides power to hydraulic pump	Control Module
9	Line Contactor	Controls the speed of the electric motor	Control Module
10	Chassis Emergency Stop Switch	Shuts down all machine functions	Chassis Controls
11	Chassis Lift Switch	Elevates platform	Chassis Controls
12	Chassis Key Switch	Allows some machine functions to be initiated from ground level	Chassis Controls
13	Lift/Drive Selector Switch	Activates lift or drive functions	Platform Controls
14	Proximity Switch	Stops lift assembly at lower limit	Platform Controls
15	Platform Emergency Stop Switch	Shuts down all machine functions	Platform Controls
16	Interlock Switch	Safety mechanism for joystick	Platform Controls
17	PQ Control Handle	Proportionally controls the drive and lift functions	Platform Controls
18	Loading Clearance Lowering Switch	Allows platform to lower completely after stopping at Loading Clearance Height	Platform Controls
19	Platform Steering Switch (2)	Control left and right steering solenoids	Platform Controls
20	Tilt Sensor	Activates tilt alarm and disables all machine functions exceptplatform lower when the machine is more than 2° out of level	Control Module
21	Steering Solenoid (right)	Shifts steering valve to the left	Hydraulic Manifold
22	Steering Solenoid (left)	Shifts steering valve to the right	Hydraulic Manifold
23	Platform Lift Solenoid	Raises platform	Hydraulic Manifold
24	Reverse Solenoid	Shifts forward/reverse valve to reverse	Hydraulic Manifold
25	Forward Solenoid	Shifts forward/reverse vavle to forward	Hyraulic Manifold
26	Depression Mechanism Extension Solenoid	Extends depression mechanism bars	Hydraulic Manifold
27	Down Solenoid	Lowers platform	Lift Cylinder
28	Depression Mechanism Retraction Solenoid	Retracts depression mechanism bars	Depression Mechanism cylinder
29	HORN	Sounds a warning	Platform Controls
30	Pressure Switch	Prevents a lift greater than the Safe Working Load.	Chassis Controls

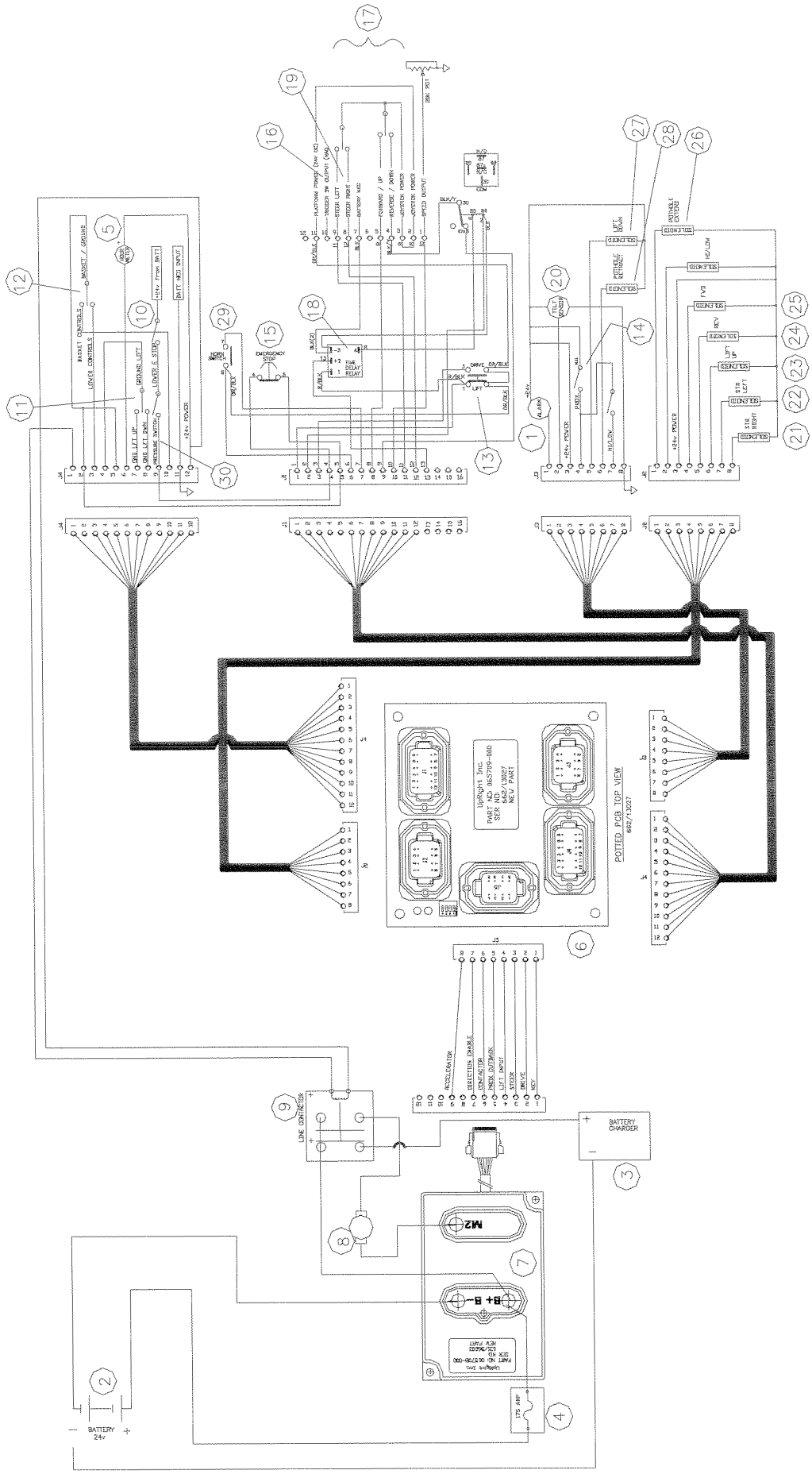
POTTED PCB TOP VIEW
UpRight Inc
BATTERY CHARGER
LINE CONTACTOR
BATTERY 24v
EMERGENCY STOP
M2
B+ B-

5.3 Hydraulic Schematic

Legend: Hydraulic Schematic, 101180-020

DESIGNATION	NAME	FUNCTION	LOCATION
CT1	Check Valve	Allows Depression Mechanism to retract in drive mode	Hydraulic Manifold
CYL1	Steering Cylinder	Provides force to turn front wheels	Front of chassis above drive motors
CYL2	Lift Cylinder	Provides force to lift platform	Mounted under upper boom weldment
CYL3	Depression Mechanism Cylinder	Extends or retracts DM bar	Front of hydraulic tank
CT2R	Priority Flow Divider	Provides priority oil flow to steering	Hydraulic Manifold
FL1	Suction Strainer	Traps particles in hydraulic tank	Inside hydraulic tank at outlet
FL2	Return Filter	Filters oil returning to tank	Back of hydraulic tank
M	Drive Motors (2)	Provides tractive effort to move platform	Front motor mounts
P	Pump	Provides hydraulic pressure for all functions	On Electric motor at left rear of control module
CT3	Main Relief Valve	Provides pressure protection to pump, limits platform load capacity.	Hydraulic Manifold
CT5	Steering Relief Valve	Provides pressure protection to pump and steering components when steering	Hydraulic Manifold
CT4	Lift Relief Valve	Provides pressure protection to Lift components	Hydraulic Manifold
TNK	Tank	Holds hydraulic oil	Control Module
CT6	Steering Right/Left Valve	Provides directional control for steering	Hydraulic Manifold
CT7	Lift/Drive Valve	Provides oil control for drive or lift functions	Hydraulic Manifold
CT13	Down/Emergency Lowering Valve	Allows oil to return to tank; manually operated for emergency lowering	Lift cylinder
CT8	Pothole mechanism Retract Valve	Provides oil control for DM bar	DM cylinder
CT12	Pothole Mechanism Extend Valve	Provides oil control for DM bar	Hydraulic Manifold
CT11	Forward/Reverse Valve	Provides oil control for drive or lift functions	Hydraulic Manifold
CT9 & CT10	Counterbalance Valve	Prevents machine from running away on slopes; cushions stops	Hydraulic Manifold
B1 & B2	Brake	Provides oil control for drive or lift functions	Rear Wheel
P1	Overload Valve	Prevents machine from running away on slopes; cushions stops	Chassis

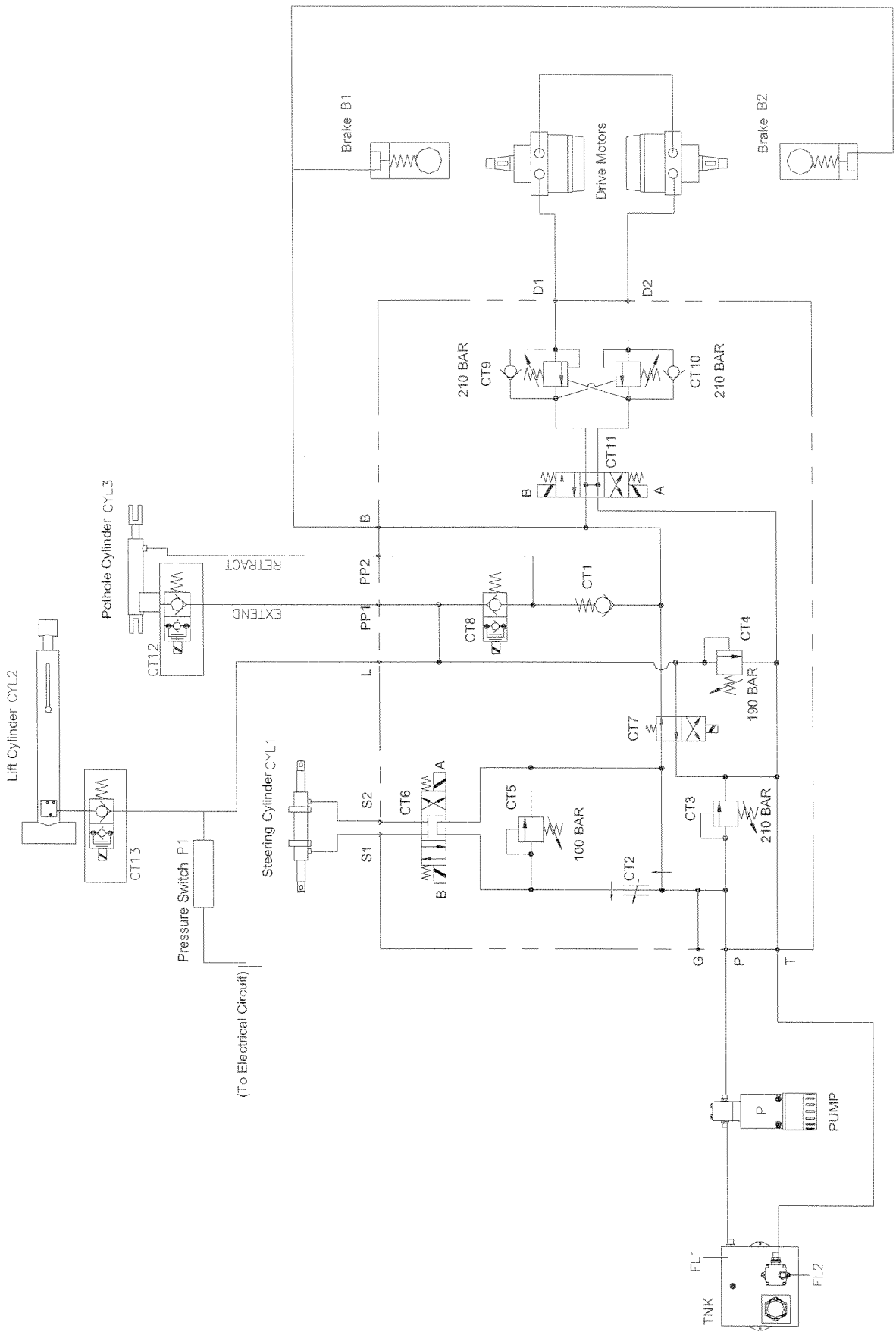
Brake B1
Drive Motors
Brake B2
D1
D2
210 BAR
CT9
CT10
210 BAR
CT11
B
A
B
PP2
RETRACT
CT1
PP1
EXTEND
CT8
CT4
190 BAR
L
CT7
Pothole Cylinder CYL3
CT12
Lift Cylinder CYL2
CT13
Steering Cylinder CYL1
S2
S1
CT6
A
B
CT5
100 BAR
CT3
210 BAR
CT2
Pressure Switch P1
(To Electrical Circuit)
G
P
T
P
PUMP
FL1
FL2
TNK

Section 6

ILLUSTRATED PARTS BREAKDOWN

6.1 INTRODUCTION

This section lists and illustrates the replaceable assemblies and parts of this product, as manufactured by UpRight.

Each parts list contains the component parts for that assembly.

CONTENTS

General Assembly....6 - 2

Chassis Assembly....6 - 4

Steer / Drive Assembly....6 - 6

Booms & Posts Assembly....6 - 8

Power Module Assembly....6 - 10

Control Module Assembly....6 - 12

Control Valve Assembly....6 - 14

Lower Controls Assembly....6 - 16

Hydraulic Tank Assembly....6 - 17

Platform Assembly.(Including Extension Deck)....6 - 18

Upper Controls Assembly....6 - 20

Hydraulic Assembly....6 - 22

Hydraulic Cylinder Assembly (Lift)....6 - 25

Hydraulic Cylinder Assembly (Steer)....6 - 26

Hydraulic Cylinder Assembly (Pothole)....6 - 27

Electrical Assembly....6 - 28

Decal Kit (English)....6 - 30

Decal Kit (German)....6 - 32

Decal Kit (Dutch)....6 - 34

General Assembly

502000-000

Item	Part	Description	QTY.
1	502011-000	CHASSIS ASSEMBLY	1
2	502002-000	BOOMS AND POSTS ASSEMBLY	1
3	502003-000	PLATFORM ASSEMBLY	1
4	502007-000	HYDRAULIC ASSEMBLY	1
5	502008-000	ELECTRICAL ASSEMBLY	1
6	502009-000	CONTROL MODULE	1
7	502010-000	POWER MODULE	1
8	502011-000	MOTOR MOUNT	1
9	502011-001	MOTOR MOUNT	1
10	502014-000	LOWER CONTROLS ASSEMBLY	1
11	DECALS	DECAL KITS	1

Item	Part	Description	QTY.
12	058592-000	PLASTIC HOSE 1/4 INCH DIAMETER	3M
13	058593-000	PLASTIC HOSE 3/8 INCH DIAMETER	3M
14			
15			
16			
17			
18			
19			
20			
21			
22			

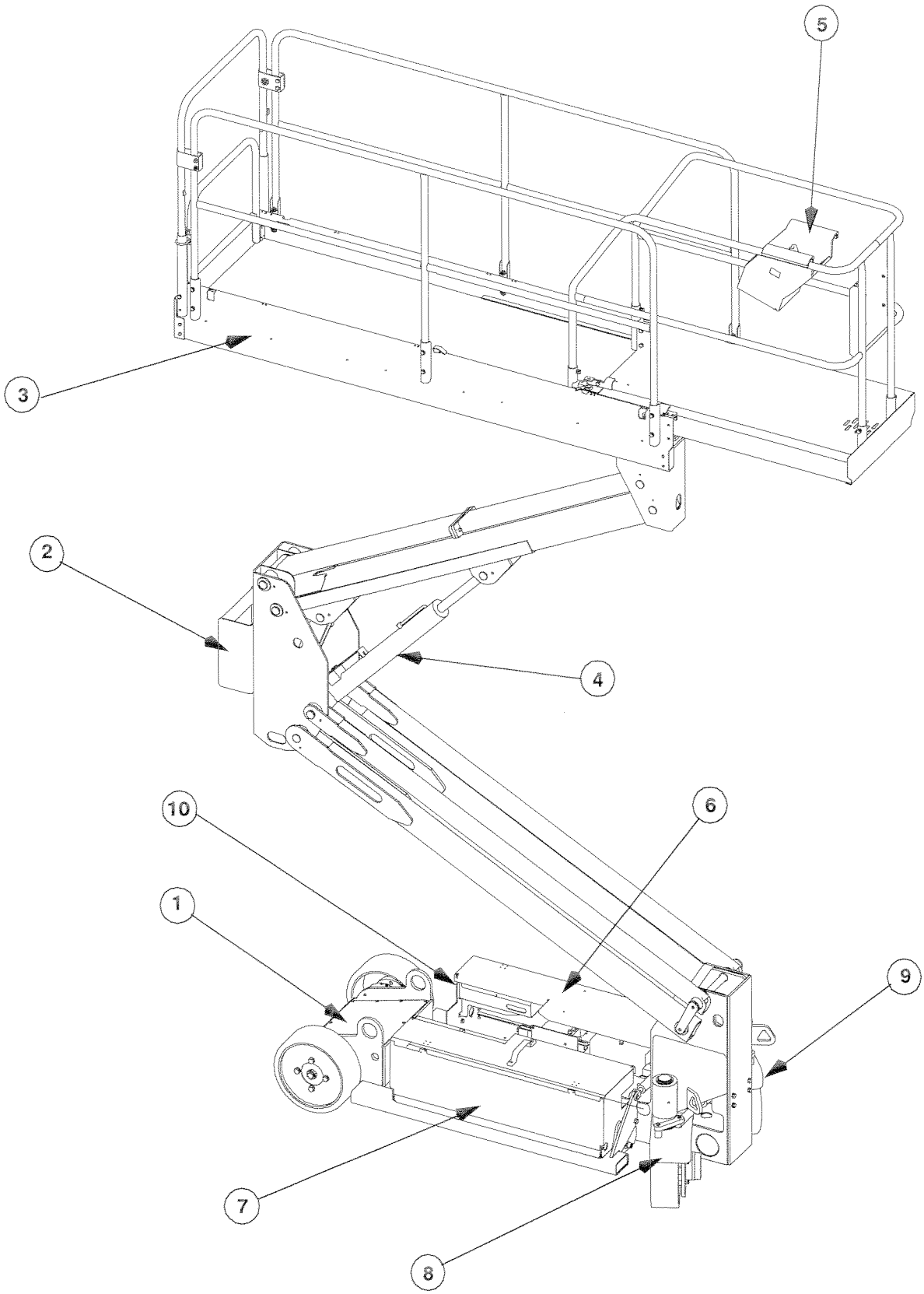

Drawing #

Chassis Assembly

502001-000

1	502020-000	CHASSIS WELDMENT	1
2	502031-000	POTHOLE WELDMENT LH	1
3	502031-001	POTHOLE WELDMENT RH	1
4	502133-000	CLAMP PLATE, HOSES	1
5	502138-000	COVER, REAR HOUSING	1
6	502170-000	WHEEL	2
7	502171-000	HUB ADAPTER	2
8	502290-000	MOUNTING PLATE	1
9	502098-000	POTHOLE PIVOT SPACER	4
10	502174-010	PLAIN BUSHING	4
11	057052-055	HEX HEAD BOLT M12 X 55	4
12	056069-012	WASHER M12	8
13	056066-012	NUT, NYLOCK	4
14	058493-020	HEX HEAD SCREW M10 X 20	
15	056069-010	WASHER M10	
16	501431-040	SOCKET HEAD CAP SCREW M16 X 64	4

17	056066-016	NYLOCK NUT M16	4
18	056069-016	WASHER M16	8
19	502183-000	PIVOT PIN	2
20	501174-020	PLAIN BUSHING	2
21	057577-000	EXTERNAL CIRCLIP	2
22	057052-075	HEX HEAD BOLT M12 X 75	8
23	056021-012	SPRING WASHER M12	8
24	058495-045	HEX HEAD SCREW M16 X 45	8
25	056021-016	SPRING WASHER M16	8
26	502152-000	SPLIT PIN DIA 4 X 50	2
27	056058-030	HEX HEAD BOLT M6 X 30	1
28	056069-006	WASHER M6	14
29	00137-000	SELF DRIVE SCREW 1/4 INCH	12
30	501253-012	BUTTON HEAD SCREW M6 X 12	1
31	502130-000	BRAKE HUB	2
32			

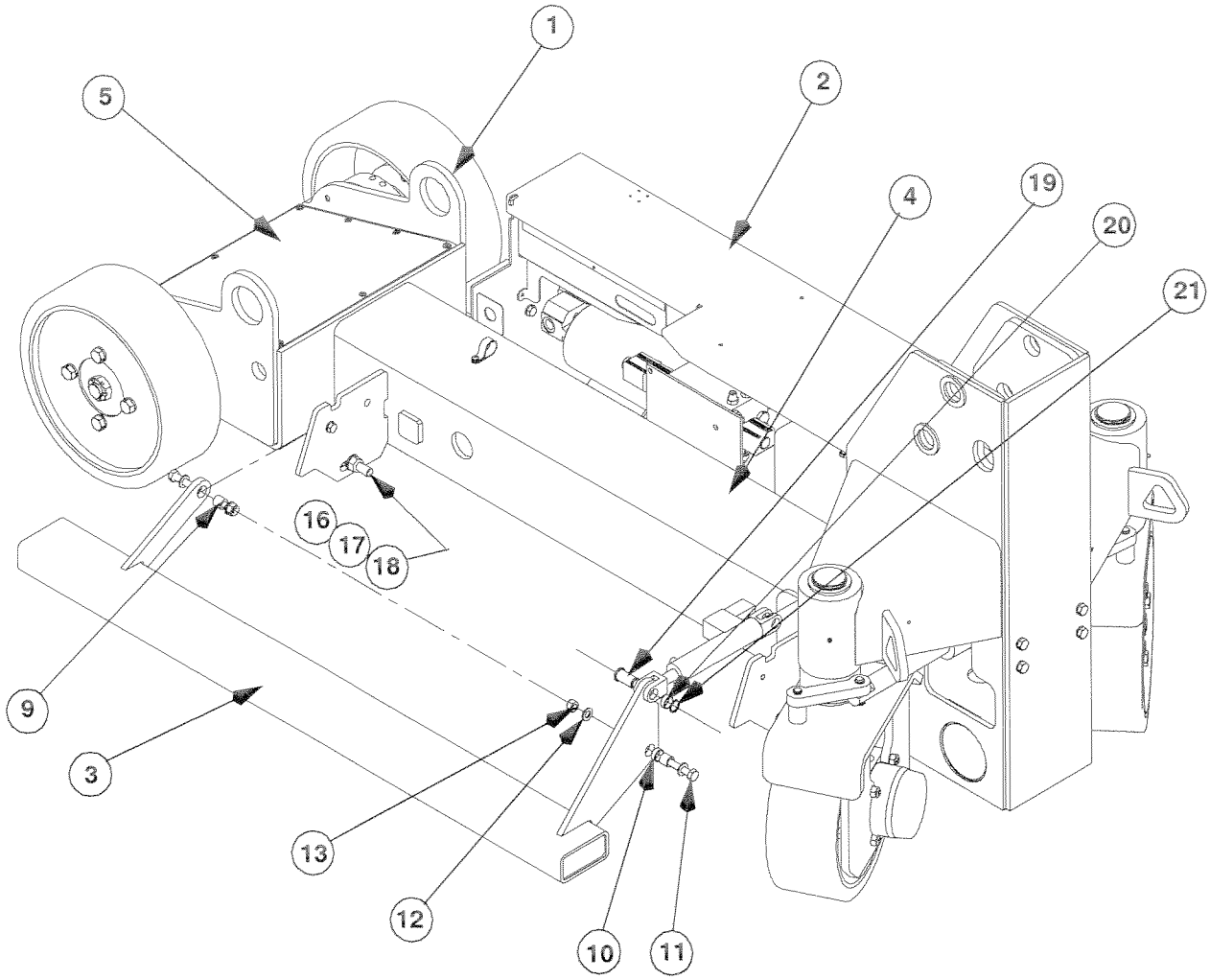
1
2
5
4
19
20
21
16
17
18
9
3
13
12
10
11

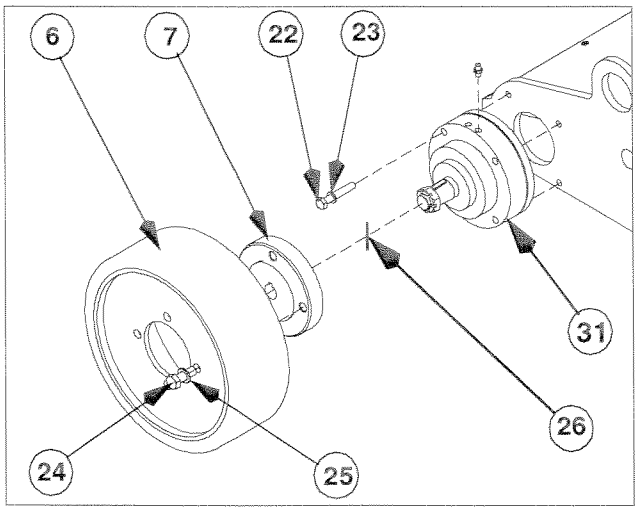
6
7
22
23
31
26
24
25

Steer / Drive Assembly

502011-000 / -001

1	502030-001	MOTOR MOUNT WELDMENT,RH (AS SHOWN)	1
2	502030-000	MOTOR MOUNT WELDMENT,LH (OPOSITE)	1
3	500775-000	STEERING RETAINING WASHER	2
4	501066-000	THRUST WASHER	2
5	501227-001	PIVOT PIN	2
6	502032-000	LINK ARM	2
7	502101-000	HYDRAULIC CYLINDER (STEERING)	1
8	501068-000	KING PIN BUSHING	4
9	501055-000	EXTERNAL CIRCLIP DIA 60	2
10	057048-000	GREASE NIPPLE M6	2
11	502125-000	MOUNTING BLOCK	2
12	057052-090	HEX HEAD BOLT M12 X 90	4
13	056021-012	SPRING WASHER M12	4
14	501340-000	FLANGED BUSHING	2
15	501439-000	PLAIN BUSHING	2
16	501056-000	EXTERNAL CIRCLIP DIA 15	4
17	502171-000	WHEEL HUB ADAPTER	2
18	058495-045	HEX HEAD SCREW M16 X 45	8
19	056021-016	SPRING WASHER M16	8
20	502152-000	SPLIT PIN DIA 4 X 50	2
21	057052-070	HEX HEAD BOLT M12 X 70	8
22	056069-012	WASHER M12	8
23	056066-012	NYLOCK NUT M12	8
24	502180-000	DRIVE MOTOR	2
25			

Steer / Drive Assembly

502011-000 / -001

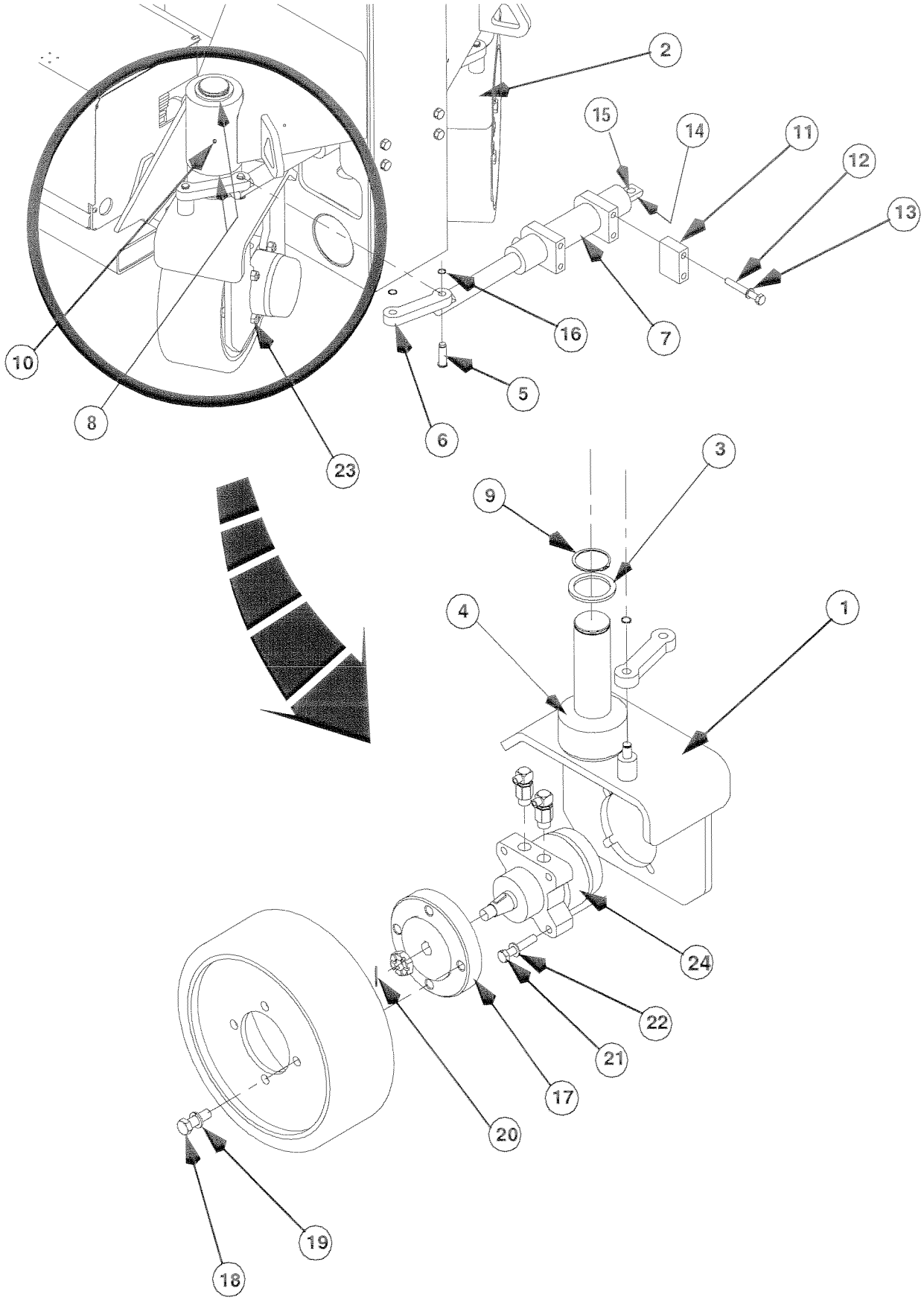

Booms & Posts Assembly

502002-000

Item	Part	Description	QTY.
1	057046-000	BUSHING	22
2	057048-000	GREASE NIPPLE, M6	36
3	058055-008	PIVOT PIN	1
4	058055-010	PIVOT PIN	2
5	058055-011	PIVOT PIN	1
6	058055-012	PIVOT PIN	2
7	058055-013	PIVOT PIN	2
8	500079-000	BUSHING, 38mm FLANGED	2
9	501425-000	MAGNETIC LIMIT SWITCH	1
10	502021-000	WELDMENT, LOWER BOOM LH	1
11	502021-001	WELDMENT, LOWER BOOM RH	1
12	502022-000	WELDMENT, LOWER TENSION BAR LH	1
13	502022-001	WELDMENT, LOWER TENSION BAR RH	1
14	502023-000	WELDMENT, RISER POST	1
15	502024-000	WELDMENT, TENSION LINK	1
16	502025-000	WELDMENT, UPPER BOOM	1
17	502026-000	WELDMENT, COMPRESSION TUBE	2
18	502097-000	SPACER, LOWER BOOM	6
19	502173-000	PIN LOCK PLATE	2
20	502175-000	WELDMENT, LADDER	1
21	502176-000	PIN LOCK PLATE	9
22	058494-030	HEX HEAD SCREW M12 X 30	4
23	502198-000	PIVOT PIN, LOWER BOOM	2
24	502205-001	SHIM 20G	1
25	502205-002	SHIM 18G	2
26	502237-000	BUSHING 40mm	8
27	502238-000	PIVOT PIN	1
28	502100-000	HYDRAULIC CYLINDER, LIFT	1
29	058493-030	HEX HEAD SCREW M10 X 30	9
30	057052-050	HEX HEAD BOLT M12 X 50	2
31	056066-012	NYLOCK NUT M12	2
32	056069-012	WASHER M12	4
33	058493-030	HEX HEAD SCREW M10 X 30	4
34	056021-010	SPRING WASHER M10	4
35	056066-010	NYLOCK NUT M10	2
36	056021-012	SPRING WASHER M12	4

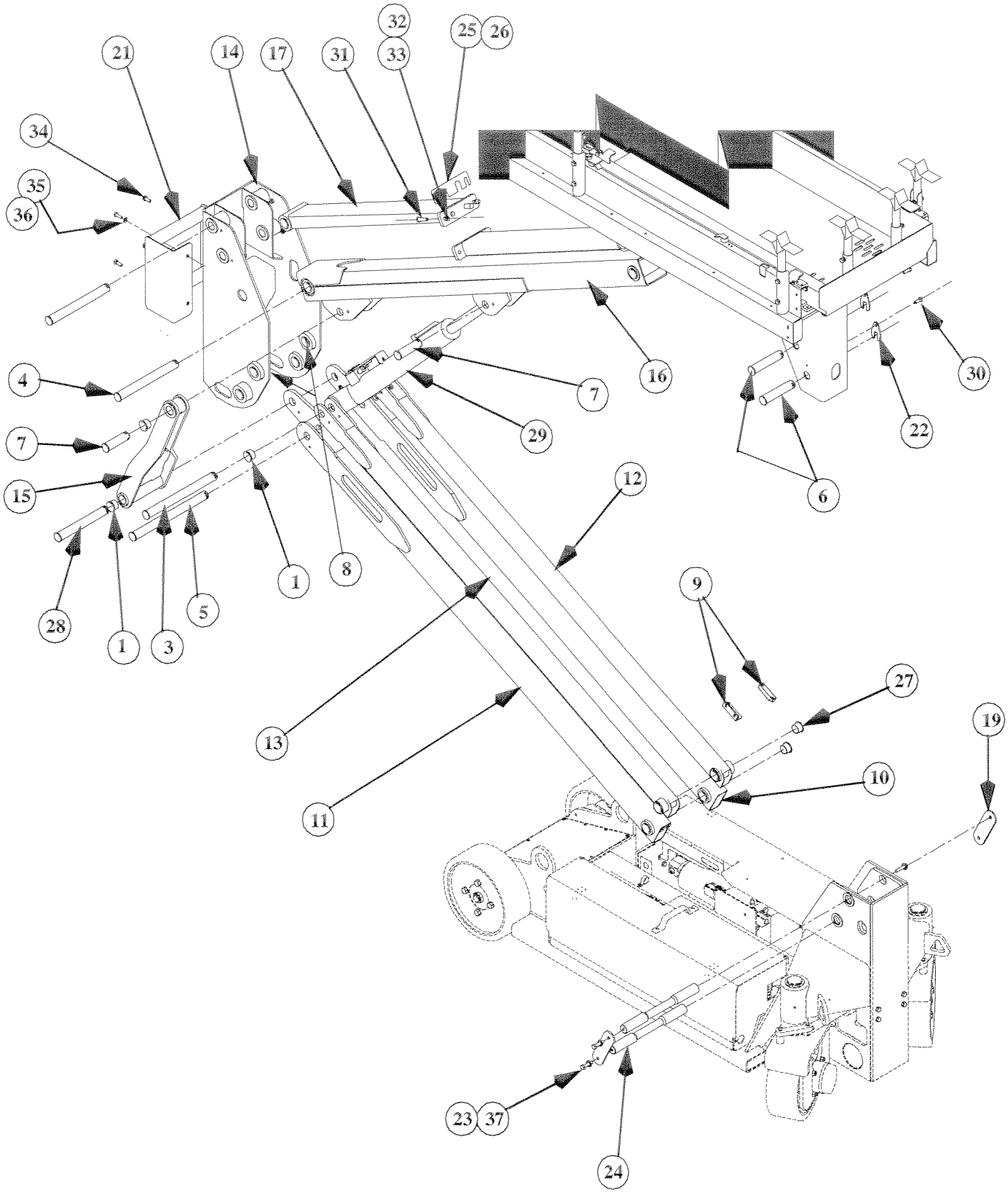
21
14
17
31
32
33
25
26
34
35
36
4
7
15
28
1
3
5
1
8
29
7
16
12
6
22
30
9
27
19
10
13
11
23
37
24

Power Module Assembly

502010-000

Item	Part	Description	QTY.
1	069199-000	BATTERY CHARGER	1
2	501253-012	BUTTON HEAD SCREW M6 X 12	4
3	056066-006	NYLOCK NUT M6	6
4	056069-006	WAHSER M6	12
5	501074-000	BATTERY	4
6	502139-000	BATTERY CLAMP ANGLE	1
7	502197-000	HOOK BOLT M8	2
8	056069-006	WASHER M8	2
9	056066-006	NYLOCK M8	2
10	502034-000	WELDMENT, POWER MODULE	1
11	502038-001	COVER, MODULE TOP	1
12	502040-001	COVER, MODULE SIDE	1
13	00562-000	RIVET 3/16	2
14	058500-025	M4 X 25 BUTTON HEAD CAP SCREW	2
15	500052-000	GRAB HANDLE	1
16	502081-000	LATCH (BOTH PARTS)	1
17	026553-004	RIVET 1/8 X 3/8	2
18	502202-000	CABLE ASSY	1
19	501253-016	M6 X 16 BUTTON HEAD CAP SCREW	2
20	056069-004	M4 WASHER	4
21	056066-004	M4 NYLOCK NUT	2

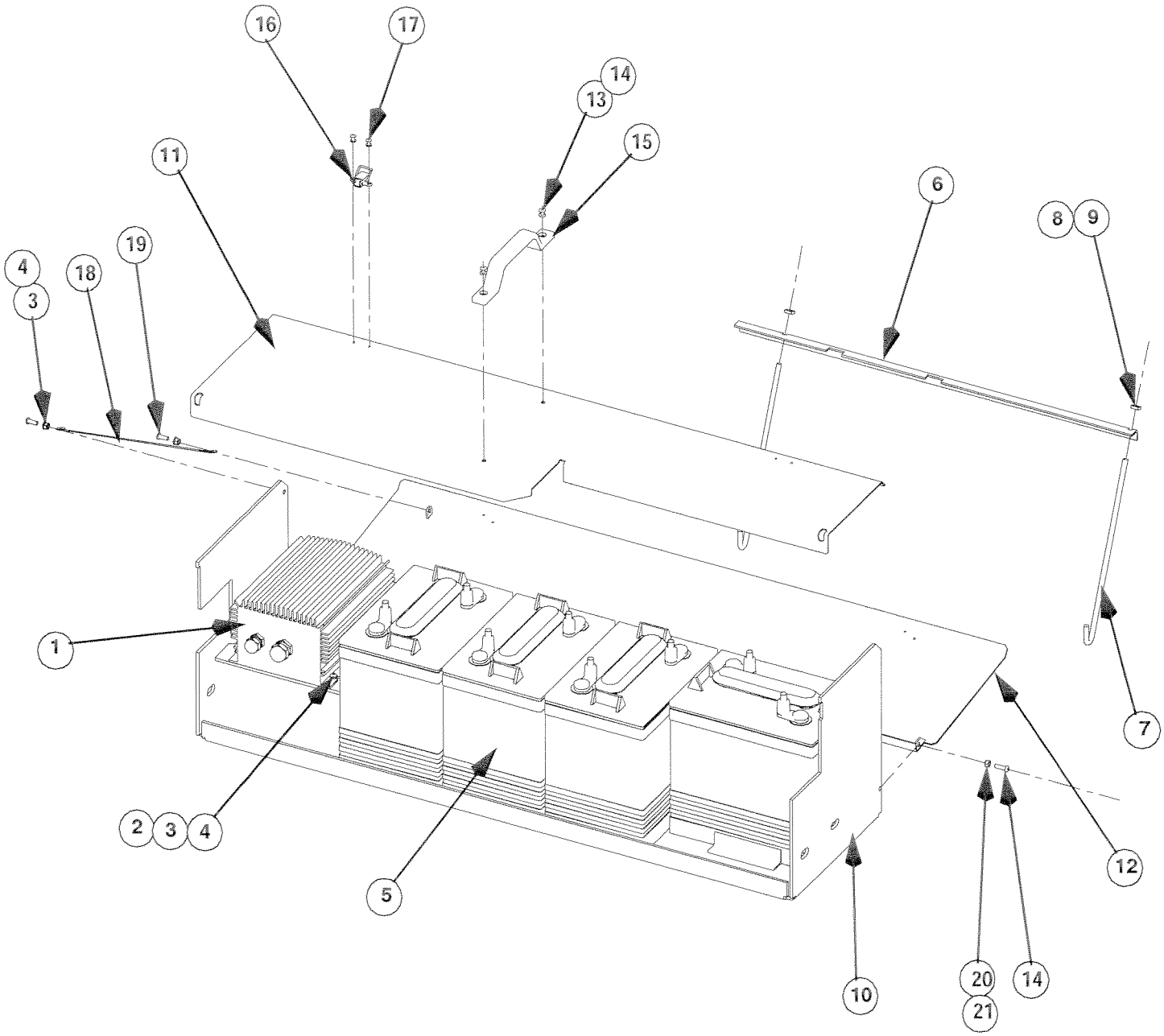
16
17
14
13
15
11
6
8
9
19
4
18
3
1
7
2
3
4
5
12
10
20
21
14

Control Module Assembly

502009-000

Item	Part	Description	QTY.
1	502203-000	WELDMENT, CONTROL MODULE	1
2	502040-000	COVER, SIDE	1
3	502200-000	HYDRAULIC MANIFOLD	1
4	502196-000	HYDRAULIC TANK	1
5	502038-000	COVER, TOP	1
6	00562-000	RIVET, 3/16	2
7	500052-000	GRAB HANDLE	1
8	058912-000	TILT SENSOR	1
9	502285-000	BRACKET, LINE CONTACTOR	1
10	501656-000	LINE CONTACTOR	1
11	502286-000	MOUNTING POST, FUSE	2
12	058921-000	MAIN FUSE	1
13	502230-000	MOTOR PUMP	1
14	501022-000	BOLT M8 X 30	4
15	501522-000	BATTERY INDICATOR (HOURMETER)	1
16	502014-000	LOWER CONTROLS ASSY	1
17	502140-000	MOUNTING PLATE, BLOCK	1
18	502278-000	ALARM BEEPER (DECENT)	1
19	056066-008	M8 NYLOCK NUT	4
20	056069-008	WASHER M8	8
21	501253-020	BUTTON HEAD SCREW M6 X 20	2
22	056066-006	NYLOCK NUT M6	10
23	056069-006	WASHER M6	16
24	058493-020	HEX HEAD SCREW M10 X 20	2
25	056066-010	NYLOCK NUT M10	2
26	056069-010	WASHER M10	2
27	058492-020	HEX HEAD SCREW M8 X 20	2
28	056066-008	NYLOCK NUT M8	2
29	058500-020	SOCKET HEAD CAP SCREW M4 X 20	2
30	056066-004	NYLOCK NUT M4	4
31	056069-004	WASHER M4	6
32	058491-020	HEX HEAD SCREW M6 X 20	2
33	501253-016	BUTTON HEAD SCREW M6 X 16	4
34	502081-000	LATCH (BOTH PARTS)	2
35	026553-004	RIVET, 1/8 X 3/8	4
36	058500-025	M4 X 25 BUTTON HEAD CAP SCREWS	2
37	501253-016	M6 X 16 BUTTON HEAD CAP SCREW	2
38	502202-000	CABLE ASSY	2

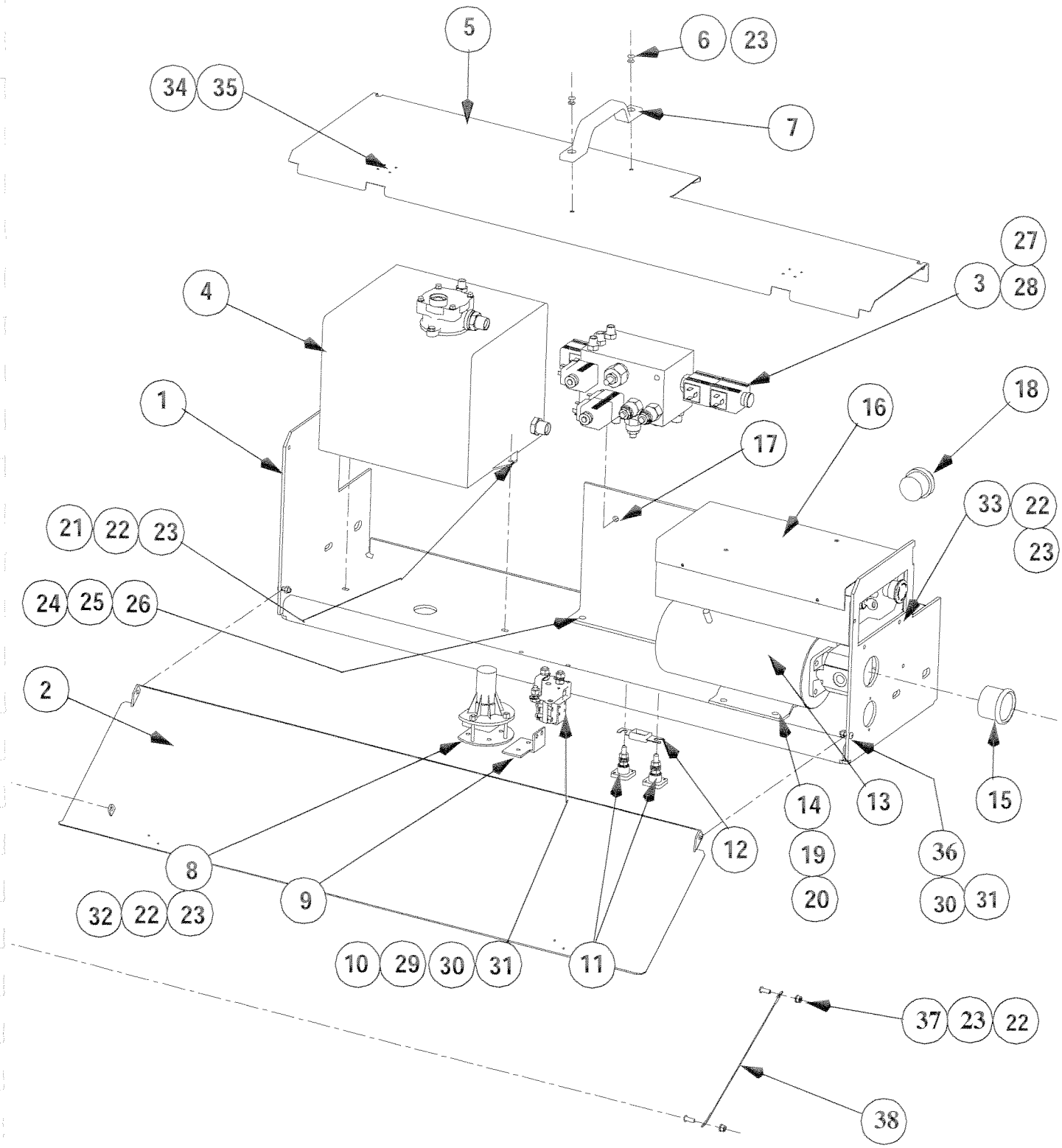
5
6
23
34
35
7
27
4
3
28
1
18
16
17
33
22
23
21
22
23
24
25
26
2
14
13
15
12
19
36
8
20
30
31
32
22
23
9
10
29
30
31
11
37
23
22
38

Control Valve Assembly

502200-000

Item	Part	Description	QTY.
1	502261-000	VALVE, DRIVE	1
2	502263-000	VALVE, POTHOLE UP	1
3	502264-000	VALVE, POTHLE DOWN	1
4	502260-000	VALVE, LIFT	1
5	502262-000	VALVE, STEER	1
6	502265-000	VALVE, RELIEF	3
7	057358-000	1/4 BSP FITTING	5
8	057122-000	3/8 BSP FITTING	4
9	057377-000	1/2 BSP FITTING	1
10	502267-000	STEERING FLOW REGULATOR	1
11	502273-000	SOLENOID (LARGE)	3
12	502274-000	SOLENOID (SMALL)	3
13		TEST PORT	1

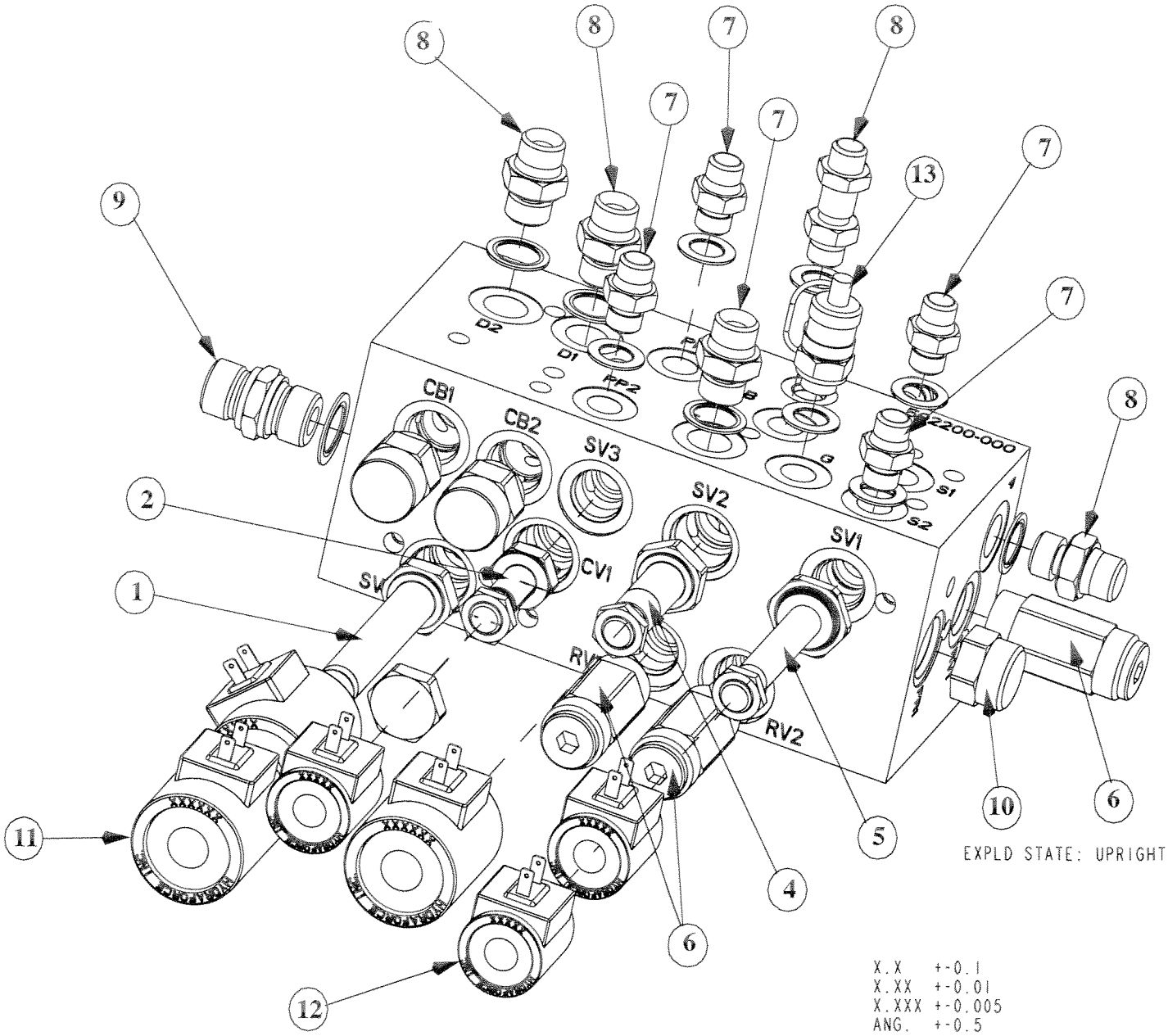
8
8
7
8
7
7
7
13
9
7
7
D2
D1
PP2
P1
B
G
S1
S2
CB1
CB2
SV3
SV2
SV1
CV1
SV
RV
RV2
8
2
1
11
12
6
4
5
10
6
EXPLD STATE: UPRIGHT
X.X +-0.1
X.XX +-0.01
X.XXX +-0.005
ANG. +-0.5

Lower Controls Assembly

502014-000

Item	Part	Description	QTY.
1	502042-000	WELDMENT	1
2	502046-000	LID	1
3	065708-001	CONTROLLER	1
4	065709-000	I/O BOARD	1
5	057019-000	SELF TAPPING SCREW	3
6	502244-000	N/O KEY SWITCH BLOCKS	11
7	502245-000	FUSE HOLDER	1
8	502246-000	CONTACT BLOCK MOUNT	1
9	502247-000	SWITCH MOUNTING BLOCK	1
10	502288-000	KEY SWITCH	1
11	502289-000	KEY	1
12	057309-000	EMERGENCY STOP SWITCH	1
13	502248-000	SWITCH MOUNT	1
14	502279-000	2 POSITION TOGGLE SWITCH	1
15	502249-000	N/C SWITCH BLOCK	1
16	502163-000	HEAT SINK PLATE	1

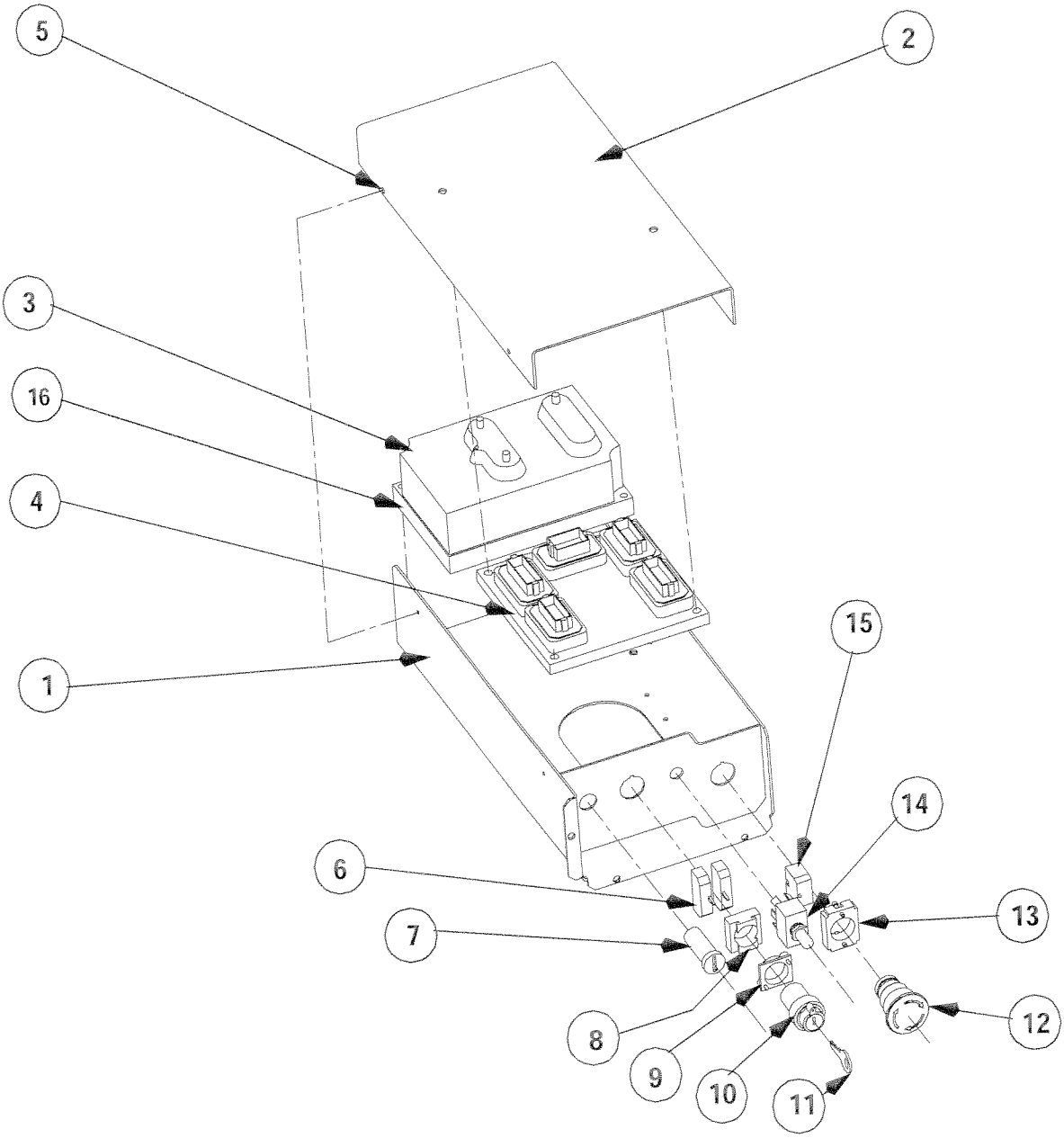

Hydraulic Tank Assembly

502196-000

Item	Part	Description	QTY.
1	502275-000	FILLER / FILTER ASSEMBLY	1
2	057358-000	HYDRAULIC FITTING 1/4 X 1/4	1
3	502215-000	HYDRAULIC FITTING 1/2 X 1/2	2
4	057108-000	DRAIN PLUG	1
5	057376-000	BONDED SEAL 1/2 INCH	1

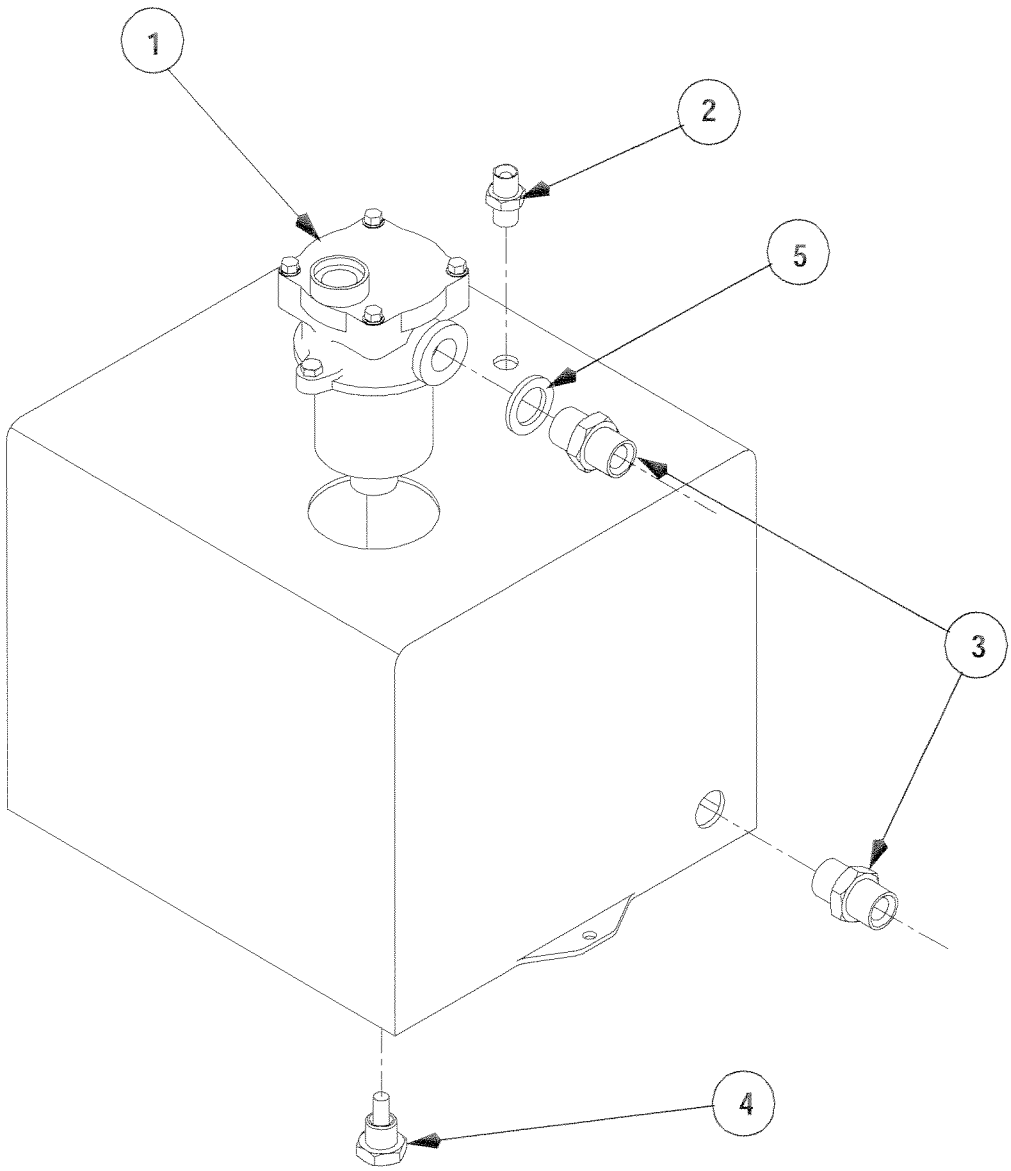

Platform Assembly

502003-000

Item	Part	Description	QTY
1	010076-000	MANUAL CASE	1
2	501352-000	GATE CATCH	1
3	501027-000	WELDMENT, EXTENSION DECK	1
4	501029-000	WELDMENT, PLATFORM	1
5	502126-000	PLYWOOD DECK	1
6	502127-000	RETAINER PLATE	2
7	502128-000	WEAR PAD (SIDE)	4
8	502129-000	ROLLER STOP	4
9	502131-000	WEAR PAD (BOTTOM)	2
10	502132-000	ROLLER	4
11	502134-000	STOP PLATE, GATE	1
12	502134-001	BRACKET, GATE STOP	1
13	502141-000	STOP LEVER	1
14	502145-000	WELDMENT, STOP LEVER (EXT DECK)	1
15	502148-000	WEAR PAD, CENTER	1
16	502150-000	WELDMENT, ROLLER MOUNT	2
17	502151-000	WLEDMENT, SIDE LATCH (END RAIL)	2
18	502160-000	WELDMENT, GATE HINGE	1
19	502204-000	SPRING	1
20	502206-000	PIVOT, GATE BOTTOM	1
21	502231-000	PIPE CLAMP, GATE HINGE	1
22	502258-000	SAFETY WALK 6 INCH	3.4M
23	502259-000	SAFETY WALK 12 INCH (ON ACCESS STEPS)	.37M
24	502291-000	HARNESS HARD POINT	1
25	009442-001	PLUNGER (COMPRESSION SPRING)	3
26	056060-050	HEX HEAD BOLT, M10 X 50	4

Item	Part	Description	QTY
27	056060-050	HEX HEAD BOLT, M10 X 50	8
28	056021-010	SPRING WASHER, M10	8
29	058493-025	HEX HEAD SCREW, M10 X 25	1
30	056066-010	NYLOCK NUT, M10	1
31	058491-016	HEX HEAD SCREW, M6 X 16	4
32	056069-006	WASHER, M6	4
33	056066-006	NYLOCK NUT, M6	4
34	00562-000	RIVET, 3/16 X 3/8	2
35	056060-060	HEX HEAD BOLT M10 X 60	18
36	056066-010	NYLOCK NUT M10	18
37	058492-020	HEX HEAD SCREW M8 X 20	6
38	056066-008	NYLOCK NUT M8	6
39	058500-020	SOCKET HEAD CAO SCREW, M4 X 20	8
40	056066-004	NYLOCK NUT M4	8
41	056059-050	HEX HEAD BOLT M8 X 50	1
42	056066-008	NYLOCK NUT M8	1
43	056069-008	WASHER M8	1
44	501253-016	BUTTON HEAD SCREW M6 X 16	4
45	056069-006	WASHER M6	16
46	056066-006	NYLOCK NUT M6	16
47	501253-025	BUTTON HEAD SCREW M6 X 25	16
48	502190-000	GUARDRAIL WELDMENT (SIDE RAIL)	2
49	502192-000	GUARDRAIL WELDMENT (END RAIL)	1
50	502193-000	GUARDRAIL WELDMENT (GATE)	1
51	502191-000	GUARDRAIL WELDMENT (EXTENSION DECK)	1

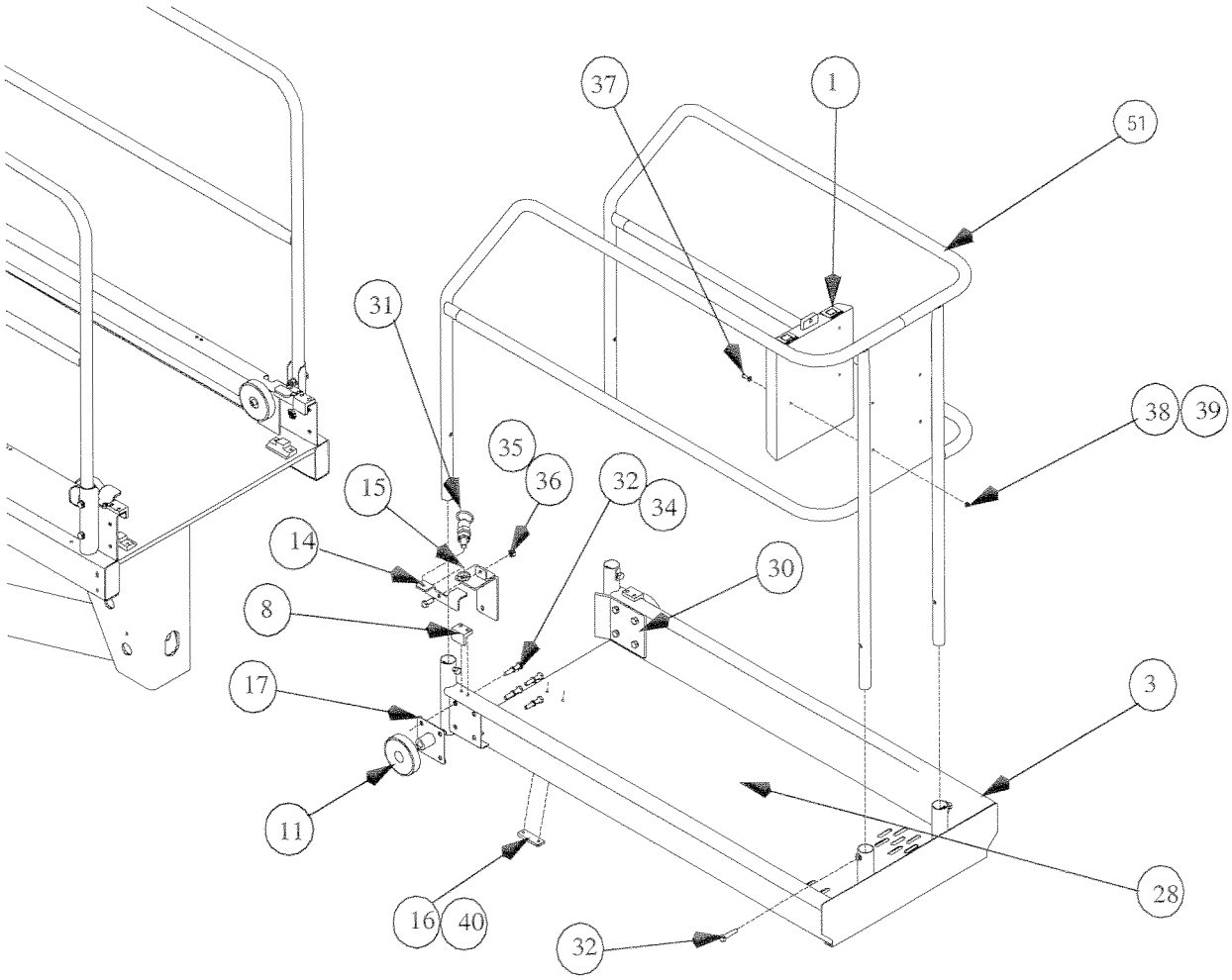

Platform Assembly

502003-000

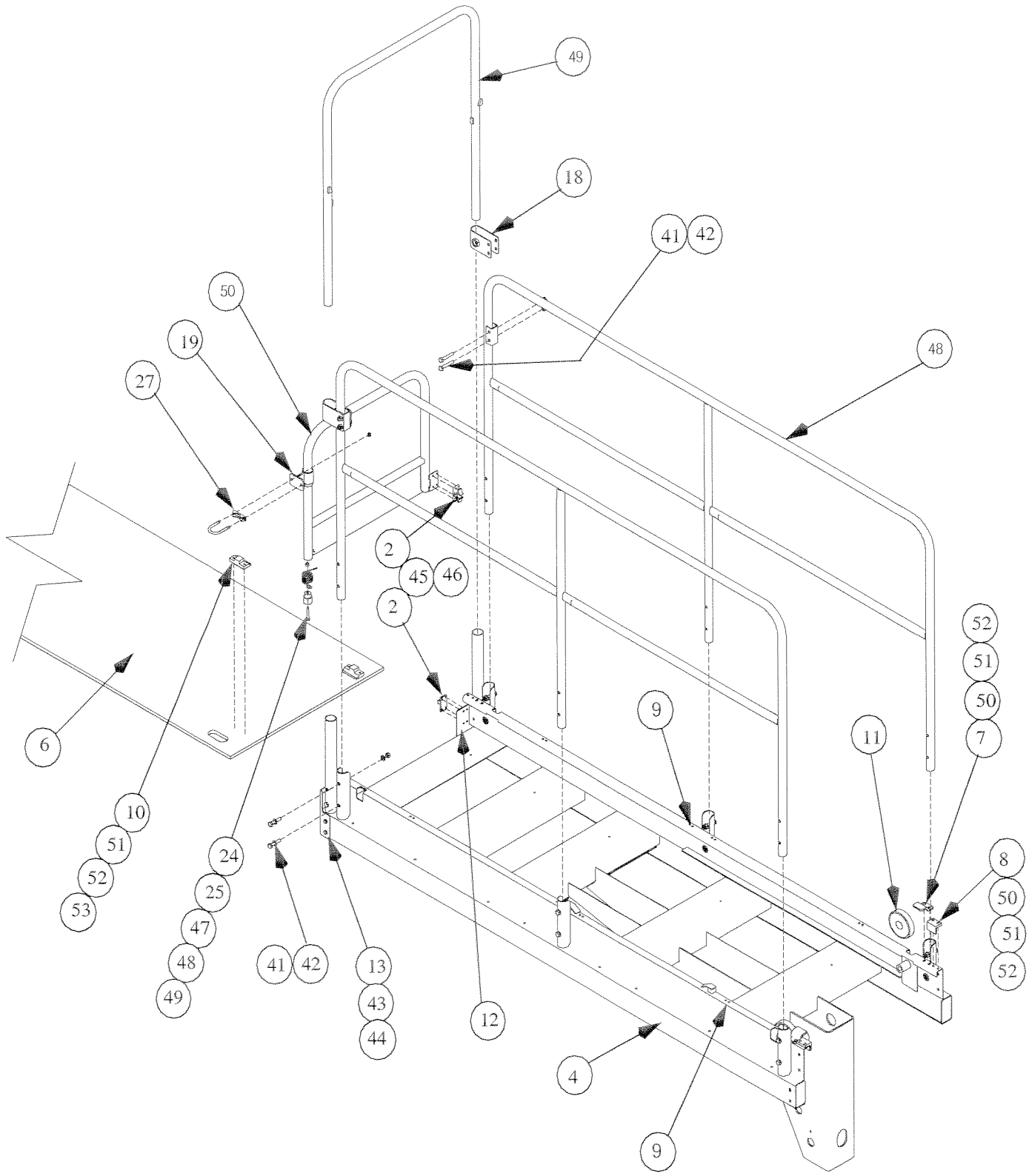

Upper Controls Assembly

Item	Part	Description	QTY.
1	058804-001	JOYSTICK	1
2	057309-000	EMERGENCY STOP SWITCH	1
3	502248-000	SWITCH MOUNT	2
4	502249-000	N/C SWITCH BLOCK	1
5	502126-000	MOUNTING PLATE	1
6	058807-000	SELECTOR SWITCH, 2 POSITION	1
7	502199-000	RELAY, N/O (5SECOND DECENT DELAY)	1
8	502243-000	SWITCH BLOCK, N/O & N/C (2 POSITION SWITCH)	1
9	101188-010	UPPER CONTROL ENCLOSURE	1
10	502244-000	SWITCH BLOCK, N/O	1
11	502242-000	HORN BUTTON	1
12	502250-000	DECAL, UCB	1

Upper Controls Assembly

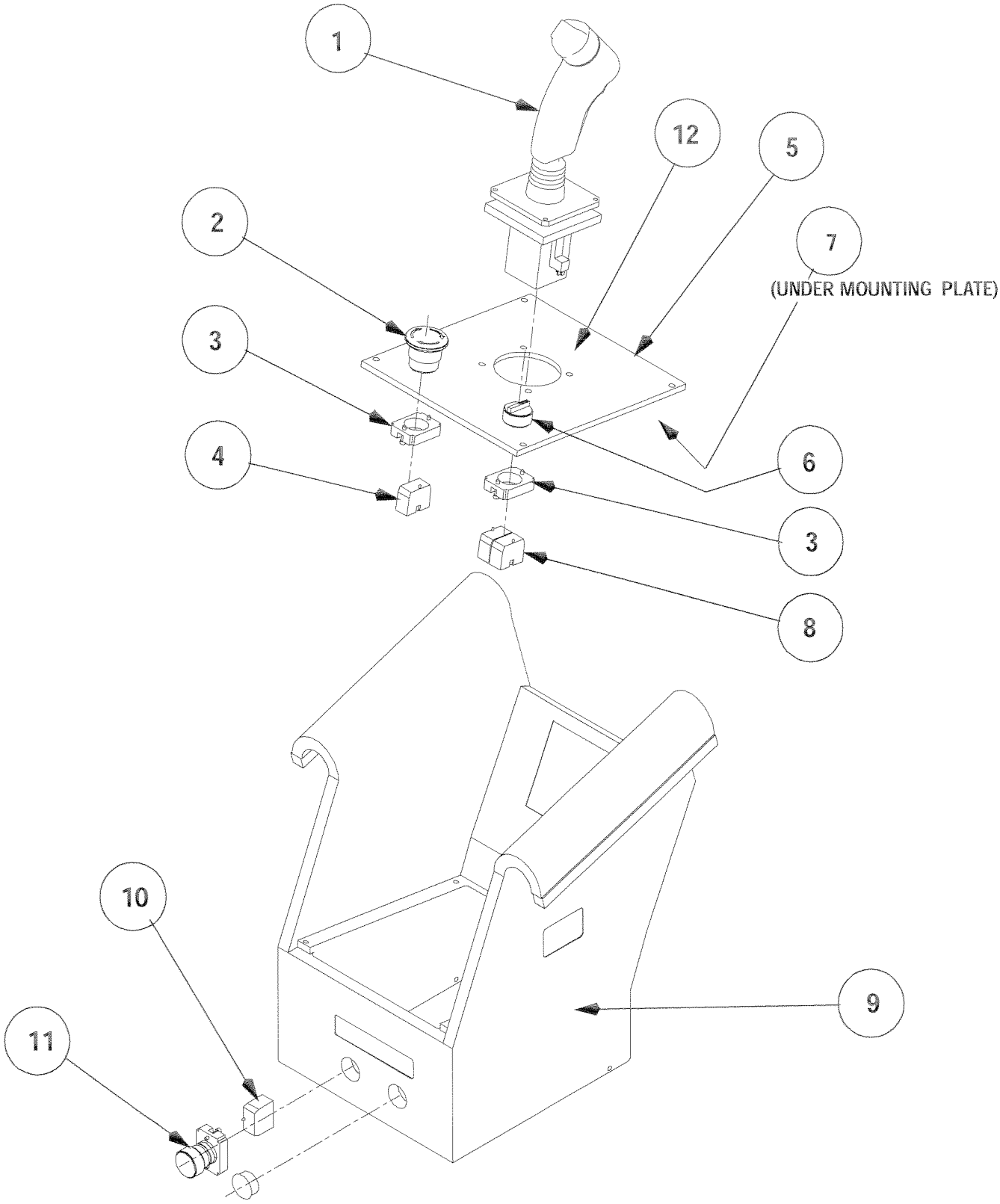

Hydraulic Assembly

502007-000

Item	Part	Description	QTY.
1	057126-000	HYDRAULIC OIL (VG46)	20L
2	502100-000	CYLINDER, LIFT	1
3	502101-000	CYLINDER, STEER	1
4	502102-000	CYLINDER, POTHOLE	1
5	502130-000	REAR HUB, BRAKE	2
6	502180-000	DRIVE MOTOR	2
7	502196-000	TANK, HYDRAULIC	1
8	502200-000	MANIFOLD, HYDRAULIC	1
9	502230-000	MOTOR PUMP UNIT	1
10	502218-000	HYDRAULIC HOSE, MANIFOLD TO TEE BRAKE	1
11	502219-000	HYDRAULIC HOSE, TEE TO BRAKE HUBS	1

Item	Part	Description	QTY.
12	502220-000	HYDRAULIC HOSE, MANIFOLD TO STEERING CYL	2
13	502221-000	HYDRAULIC HOSE,MANIFOLD TO POTHOLE (EXT)	1
14	502222-000	HYDRAULIC HOSE, MANIFOLD TO POTHOLE (RET)	1
15	502223-000	HYDRAULIC HOSE, MANIFOLD TO LIFT (EXT)	1
16	502224-000	HYDRAULIC HOSE, MANIFOLD TO LIFT (RET)	1
17	502225-000	HYDRAULIC HOSE, MANIFOLD TO DRIVE MOTORS	1
18	502226-000	HYDRAULIC HOSE, MOTOR TO MOTOR (SERIES)	1
19	502227-000	HYDRAULIC HOSE, TANK TO PUMP (SUCTION)	1
20	502228-000	HYDRAULIC HOSE,PUMP TO BLOCK (PRESSURE)	1
21	502229-000	HYDRAULIC HOSE,MANIFOLD TO FILTER (RETURN)	1
22			

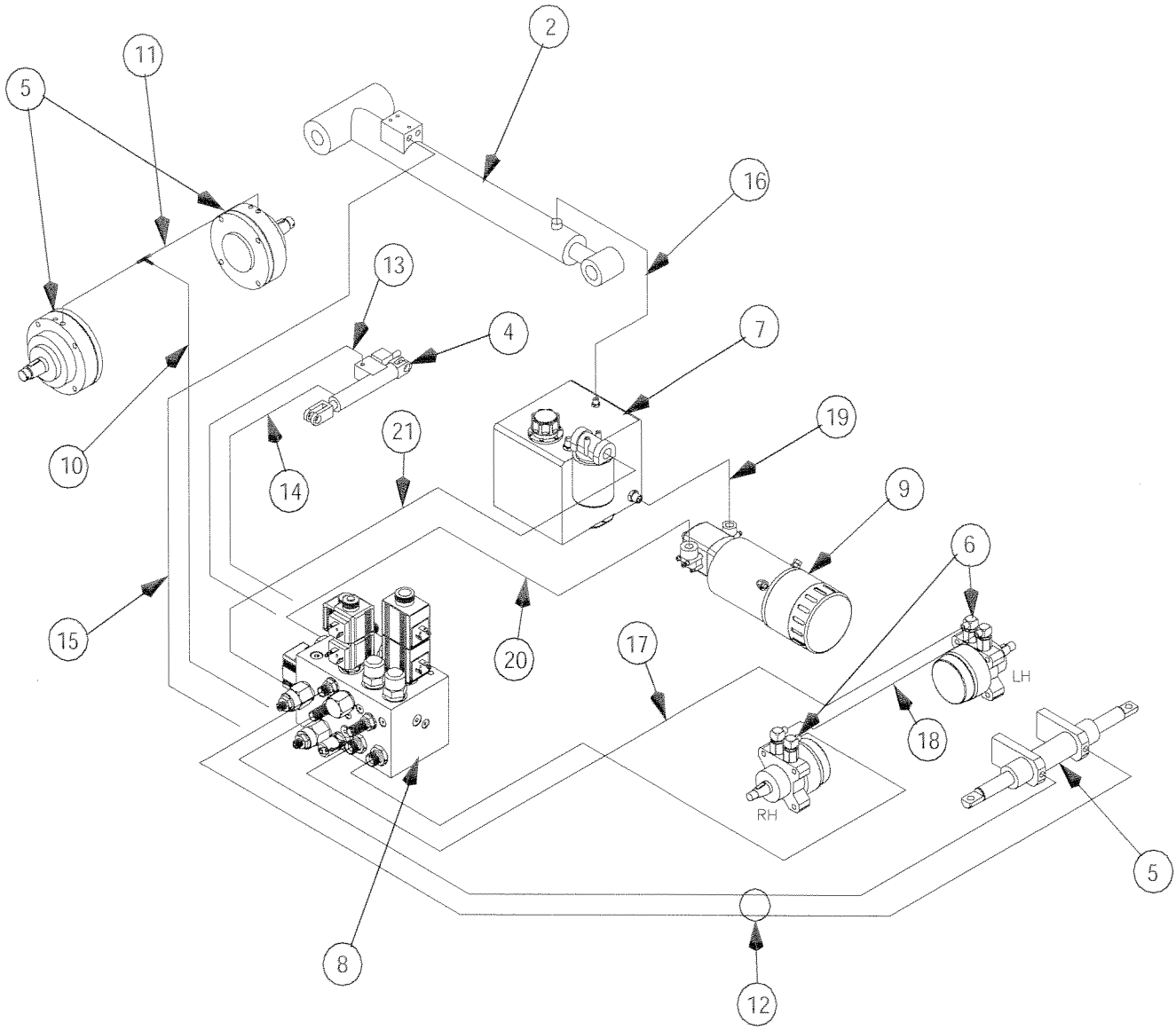
2
11
5
16
13
4
7
10
21
19
14
9
6
15
20
17
LH
18
RH
5
8
12

Hydraulic Schematic

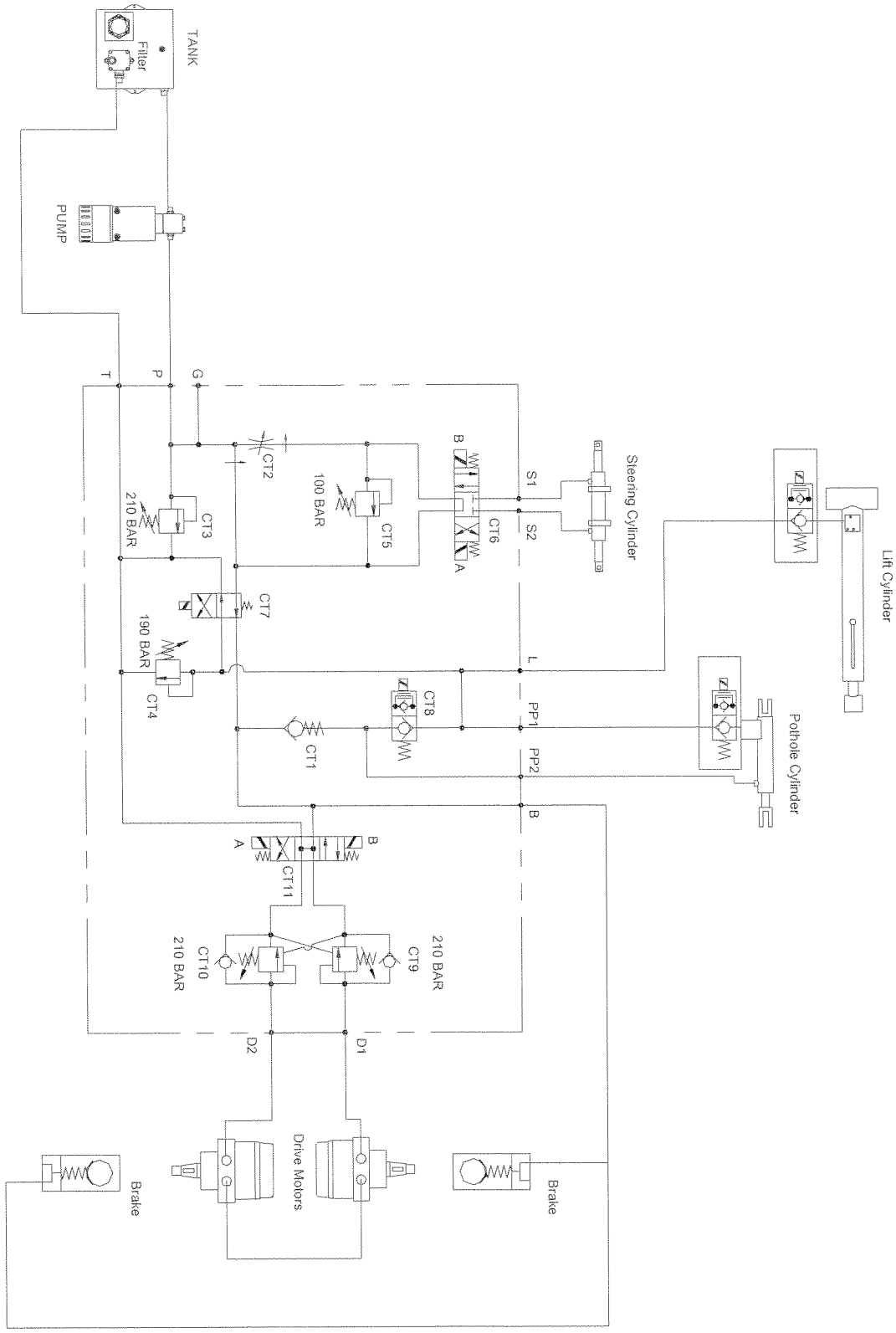

Hydraulic Cylinder Assembly (Lift)

502100-000

Item	Part	Description	QTY.
1	502201-000	CABLE, EMERGENCY DOWN	1
2	502142-000	BRACKET, EMERGENCY DOWN	1
3	502270-000	SEAL KIT, LIFT	1
4	502266-000	VALVE, EMERGENCY DOWN	1
5	057048-000	GREASE NIPPLE, M6	2
6	058492-012	HEX HEAD SCREW, M8	3
7	056021-008	SPRING WASHER, M8	3
8	500079-000	BUSHING, FLANGED	4

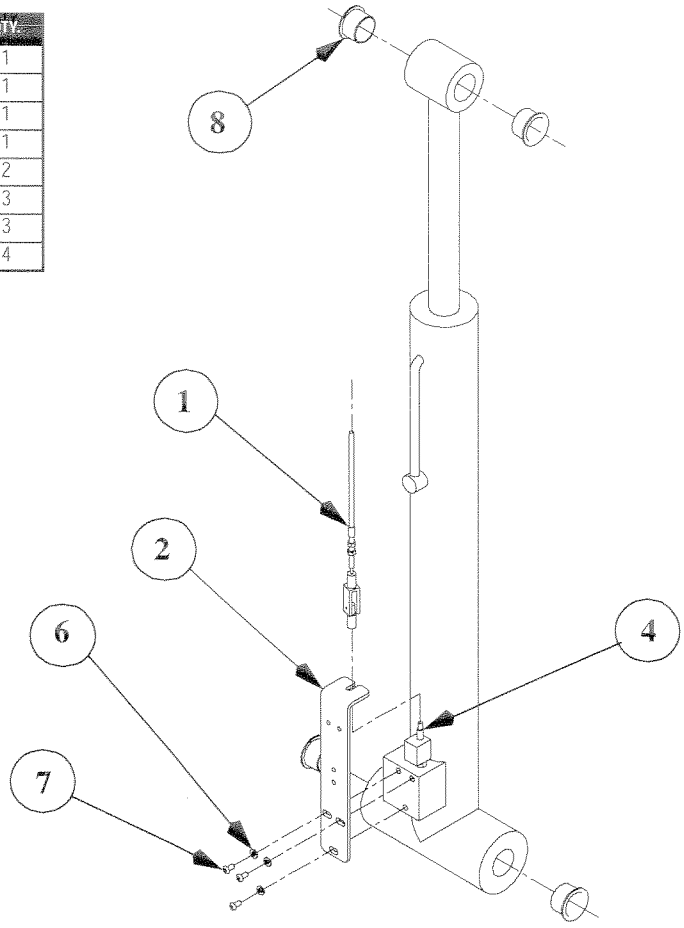

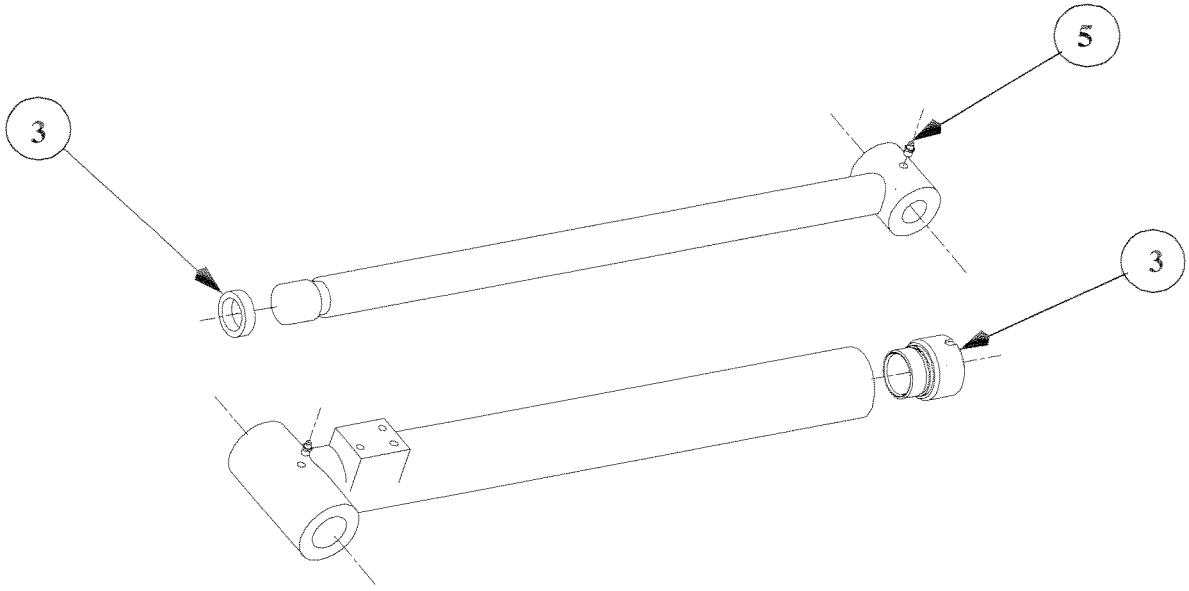

Hydraulic Cylinder Assembly (Steer)

502101-000

Item	Part	Description	QTY.
1	502271-000	SEAL KIT, STEER	1
2	501439-000	BUSHING, PLAIN	2
3	501340-000	BUSHING, FLANGED	2

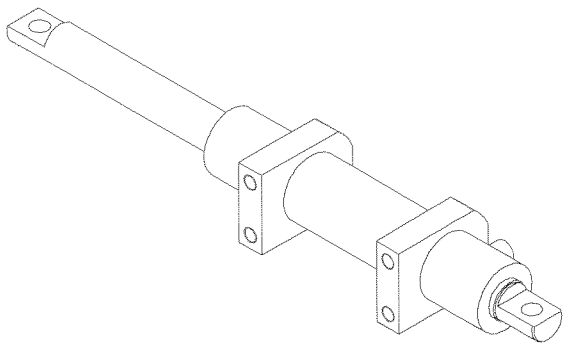

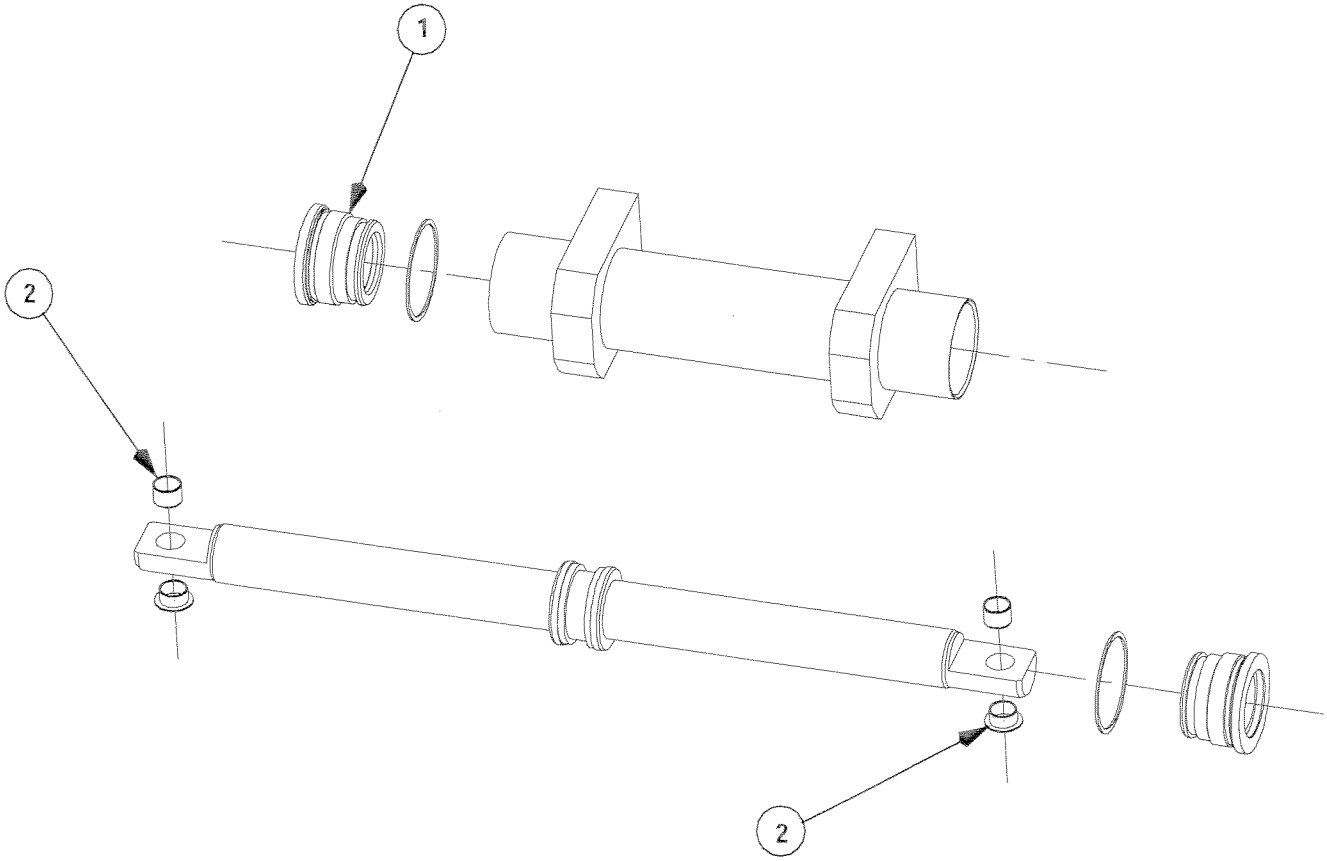

Hydraulic Cylinder Assembly (Pothole)

502102-000

Item	Part	Description	QTY.
1	502272-000	SEAL KIT, POTHOLE	1
2	057358-000	HYDRAULIC FITTING (1/4 BSP)	2

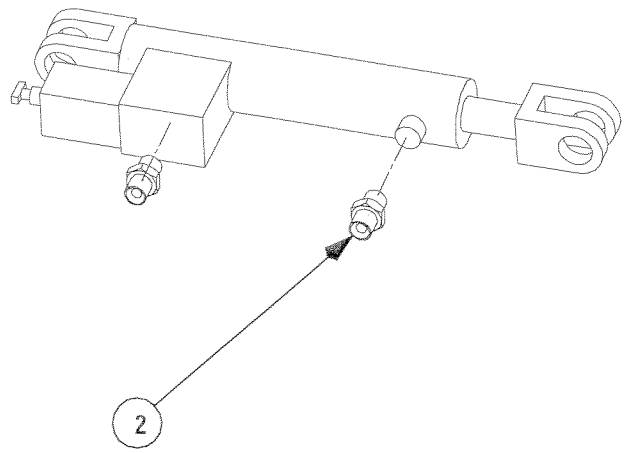

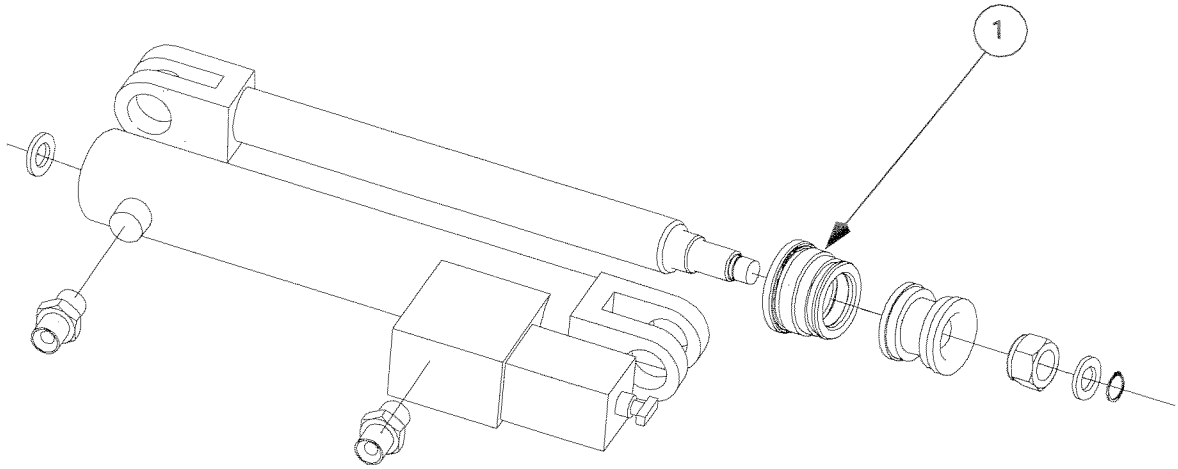

Electrical Assembly

502008-000

Item	Part	Description	QTY.
1	065708-001	MINI MOS UNIT	1
2	065709-000	I/O BOARD	1
3	069199-000	BATTERY CHARGER	1
4	501656-000	LINE CONTACTOR	1
5	058921-000	MAIN FUSE	1
6	501074-000	BATTERIES	4
7	502278-000	ALARM BEEPER	1
8	058912-000	TILT SENSOR	1
9	502180-000	MOTOR PUMP	1
10	502522-000	HOURMETER	1
11	502281-000	CABLE, MINI MOS TO I/O BOARD	1

Item	Part	Description	QTY.
12	502280-000	CABLE, MAIN CONTROL CABLE (I/O TO UCB)	1
13	502284-000	CABLE, I/O BOARD TO MANIFOLD BLOCK	1
14	502283-000	CABLE, I/O BOARD TO CHASSIS COMPONANTS	1
15	502282-000	CABLE, I/O BOARD TO LOWER CONTROLS	1
16	101188-010	UPPER CONTROL ENCLOSURE	1
17	057586-000	HORN	1
18	501425-000	PROXIMITY SWITCH	1
19	502014-000	LOWER CONTROL BOX	1
20	502200-000	HYDRAULIC MANIFOLD	1
21	502287-000	PLUG, MAIN HARNESS (UCB END)	1

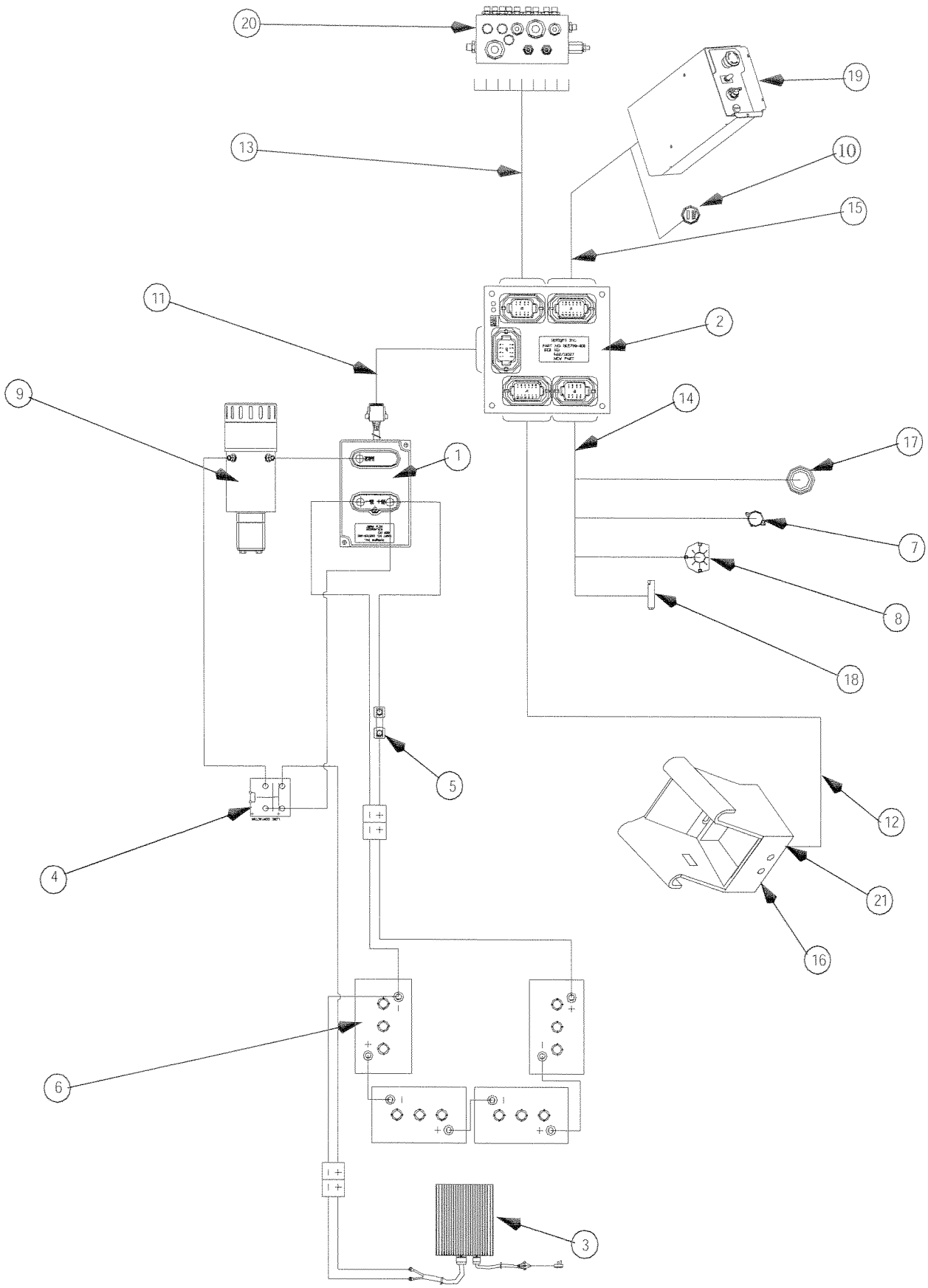
20
19
13
10
15
11
2
9
14
1
17
7
8
18
5
12
4
21
16
6
3

Label Kit Installation

502000-

Item	Part	Description	QTY.
1	057429-000	DECAL, BATTERY FLUID	1
2	502253-000	DECAL, MAX LOAD 340KG	2
3	014222-903	DECAL, FORK LIFT HERE	2
4	502255-000	NAME PLATE, SL-20	1
5	066556-900	DECAL, LOWER PLATFORM	1
6	101210-000	DECAL, DANGER HYDROGEN GAS	1
7	010076-901	DECAL, ATTENTION	1
8	502252-000	DECAL, MAX LOAD 113KG	1
9	502251-000	DECAL, LOWER CONTROLS	1
10	005223-907	DECAL, EMERGENCY LOWER	1
11	066555-000	DECAL, CAUTION RELIEF VALVE	2
12	062562-951	DECAL, DANGER BATTERIES ARE BALLAST	1
13	057696-000	DECAL, UPRIGHT	2
14	066554-000	DECAL, BAFORE OPERATING	1
15	502241-000	USER MANUAL	1
16	502240-000	SERVICE AND PARTS MANUAL	1
17	502250-000	DECAL, UPPER CONTROLS	1
18	502254-000	DECAL, SL-20	4
19	066550-006	DECAL, DANGER	1
20	101209-000	DECAL, WARNING CRUSHING	4
21	010076-000	MANUAL CASE	1
22	501453-000	DECAL, WARNING PINCH POINT	2
23	057385-000	HAZZARD TAPE	1.83M
24	502258-000	SAFETY WALK	3.1M
25	502259-000	SAFETY WALK	.18M

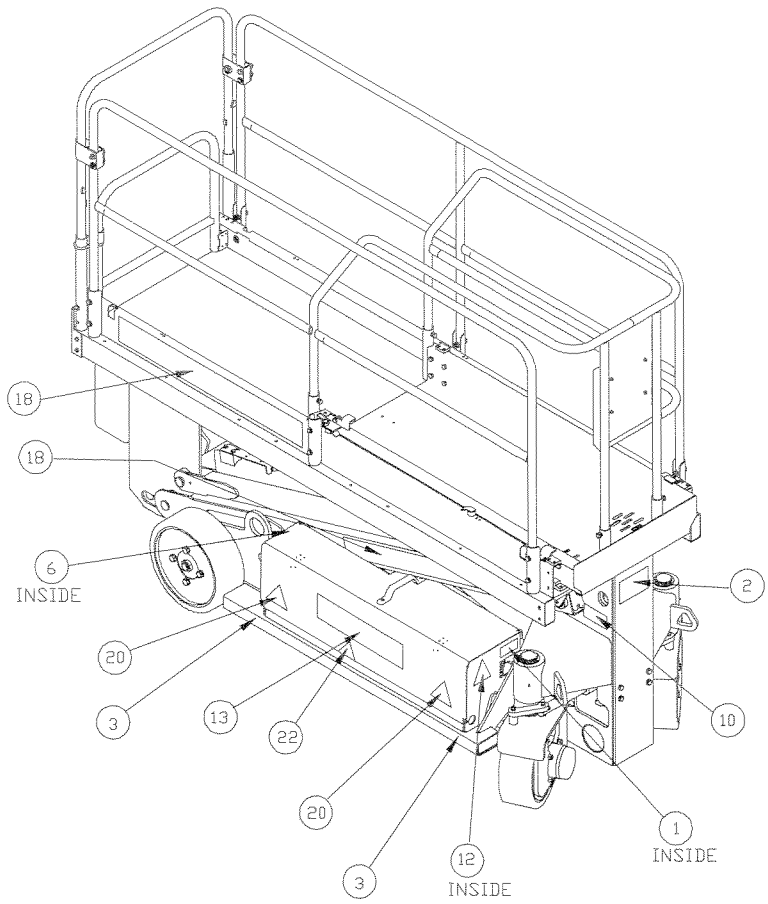

NOTE: ITEM 14 (066554-200) IS FIXED
TO THE UPPER CONTROL ENCLOSURE
FACING THE OPERATIVE.

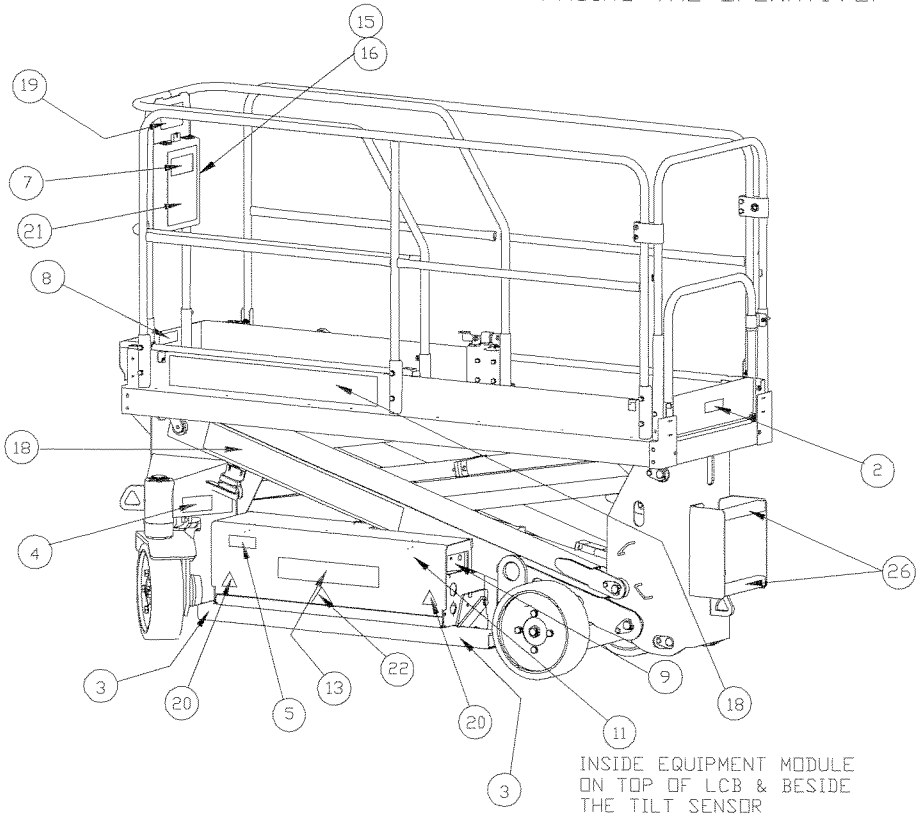

Label Kit, German

502000-

Item	Part	Description	QTY.
1	057429-000	DECAL, BATTERY FLUID	1
2	502253-000	DECAL, MAX LOAD 340KG	2
3	014222-903	DECAL, FORK LIFT HERE	2
4	502255-000	NAME PLATE, SL-20	1
5	066556-900	DECAL, LOWER PLATFORM	1
6	101210-000	DECAL, DANGER HYDROGEN GAS	1
7	010076-901	DECAL, ATTENTION	1
8	502252-000	DECAL, MAX LOAD 113KG	1
9	502251-000	DECAL, LOWER CONTROLS	1
10	005223-907	DECAL, EMERGENCY LOWER	1
11	066555-200	DECAL, CAUTION RELIEF VALVE	2
12	062562-951	DECAL, DANGER BATTERIES ARE BALLAST	1
13	057696-000	DECAL, UPRIGHT	2
14	066554-200	DECAL, BAFORE OPERATING	1
15	502241-000	USER MANUAL	1
16	502240-000	SERVICE AND PARTS MANUAL	1
17	502250-000	DECAL, UPPER CONTROLS	1
18	502254-000	DECAL, SL-20	4
19	066550-206	DECAL, DANGER	1
20	101209-000	DECAL, WARNING CRUSHING	4
21	010076-000	MANUAL CASE	1
22	501453-000	DECAL, WARNING PINCH POINT	2
23	057385-000	HAZZARD TAPE	1.83M
24	502258-000	SAFETY WALK	3.1M
25	502259-000	SAFETY WALK	.18M

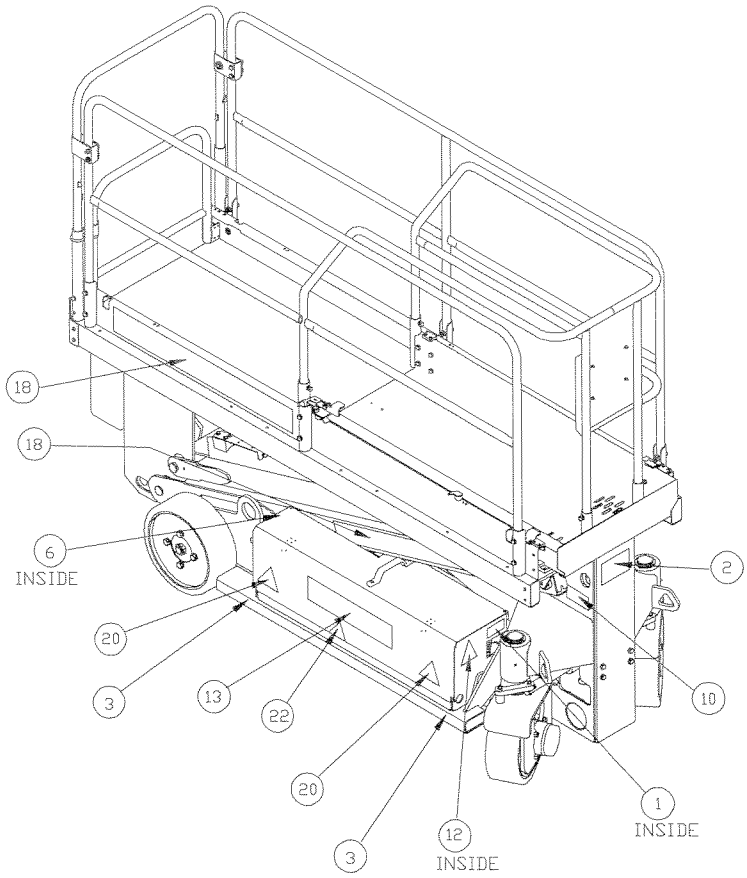

NOTE: ITEM 14 (066554-200) IS FIXED
TO THE UPPER CONTROL ENCLOSURE
FACING THE OPERATIVE.

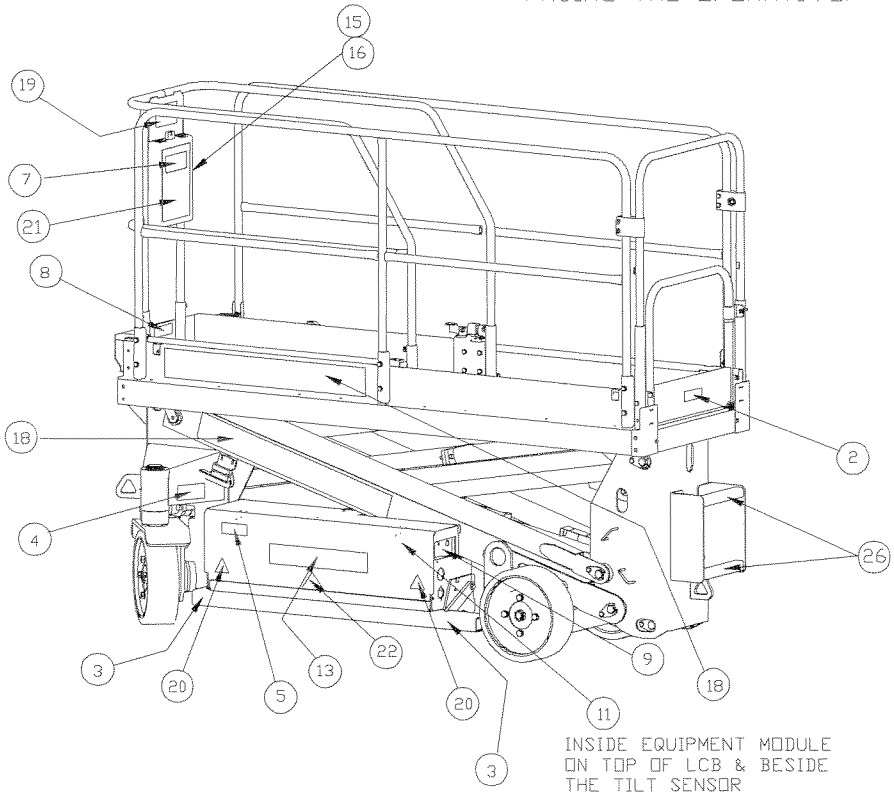

Label Kit, Dutch

502000-

Item	Part	Description	QTY
1	057429-000	DECAL, BATTERY FLUID	1
2	502253-000	DECAL, MAX LOAD 340KG	2
3	014222-903	DECAL, FORK LIFT HERE	2
4	502255-000	NAME PLATE, SL-20	1
5	066556-900	DECAL, LOWER PLATFORM	1
6	101210-000	DECAL, DANGER HYDROGEN GAS	1
7	010076-901	DECAL, ATTENTION	1
8	502252-000	DECAL, MAX LOAD 113KG	1
9	502251-000	DECAL, LOWER CONTROLS	1
10	005223-907	DECAL, EMERGENCY LOWER	1
11	066555-300	DECAL, CAUTION RELIEF VALVE	2
12	062562-951	DECAL, DANGER BATTERIES ARE BALLAST	1
13	057696-000	DECAL, UPRIGHT	2
14	066554-300	DECAL, BAFORE OPERATING	1
15	502241-000	USER MANUAL	1
16	502240-000	SERVICE AND PARTS MANUAL	1
17	502250-000	DECAL, UPPER CONTROLS	1
18	502254-000	DECAL, SL-20	4
19	066550-306	DECAL, DANGER	1
20	101209-000	DECAL, WARNING CRUSHING	4
21	010076-000	MANUAL CASE	1
22	501453-000	DECAL, WARNING PINCH POINT	2
23	057385-000	HAZZARD TAPE	1.83M
24	502258-000	SAFETY WALK	3.1M
25	502259-000	SAFETY WALK	.18M

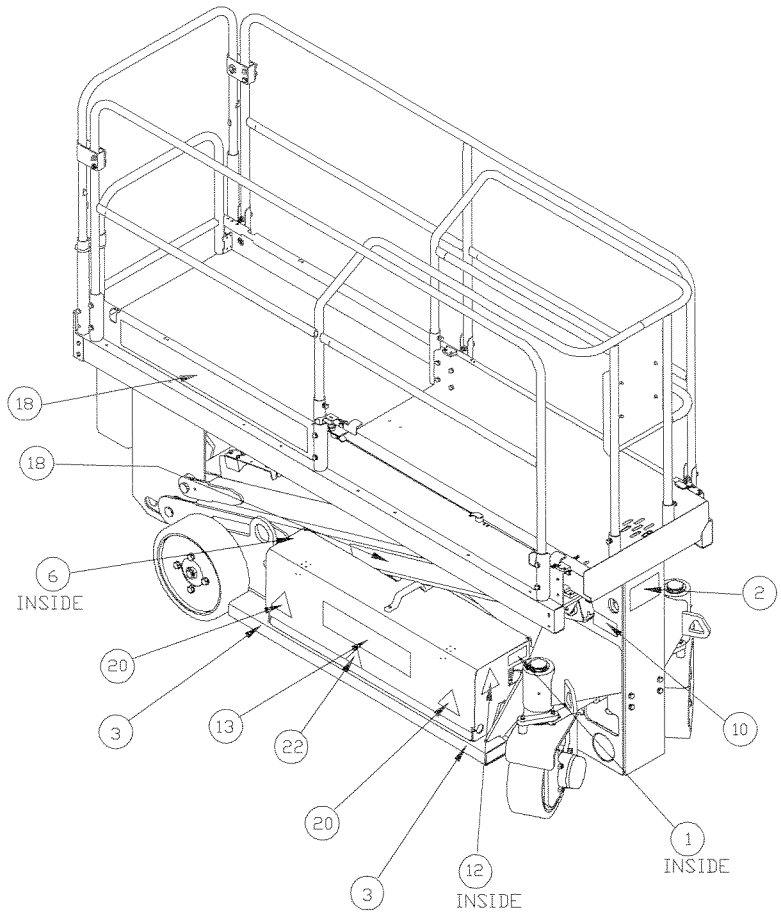

NOTE: ITEM 14 (066554-200) IS FIXED
TO THE UPPER CONTROL ENCLOSURE
FACING THE OPERATIVE.

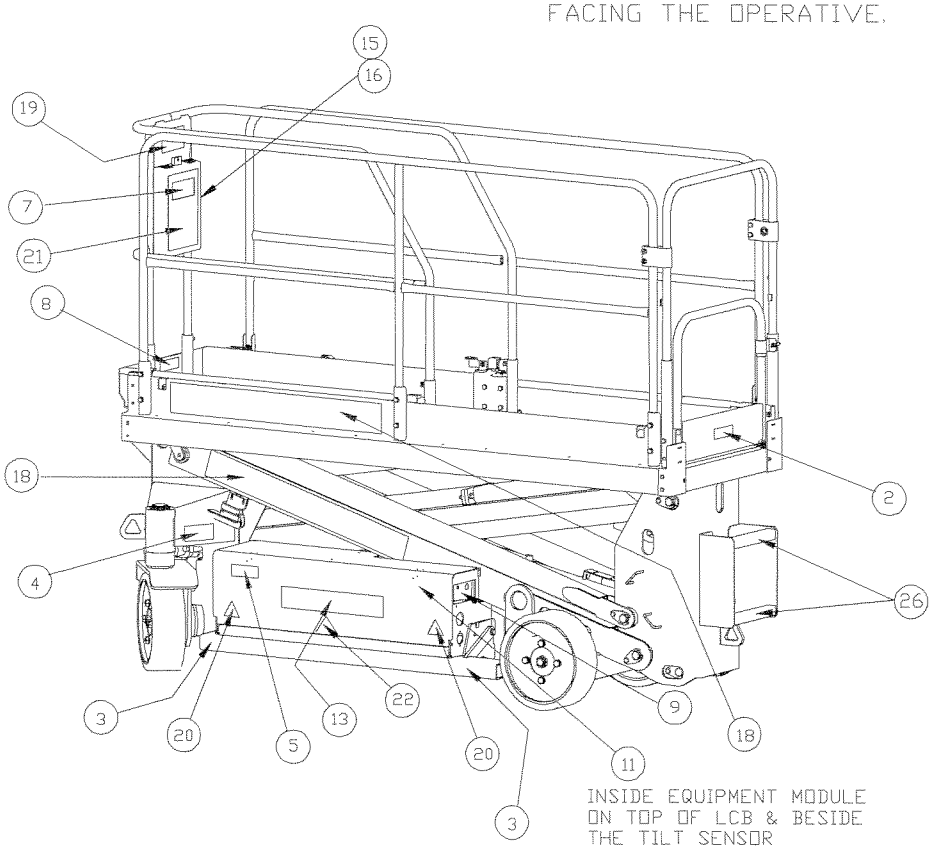

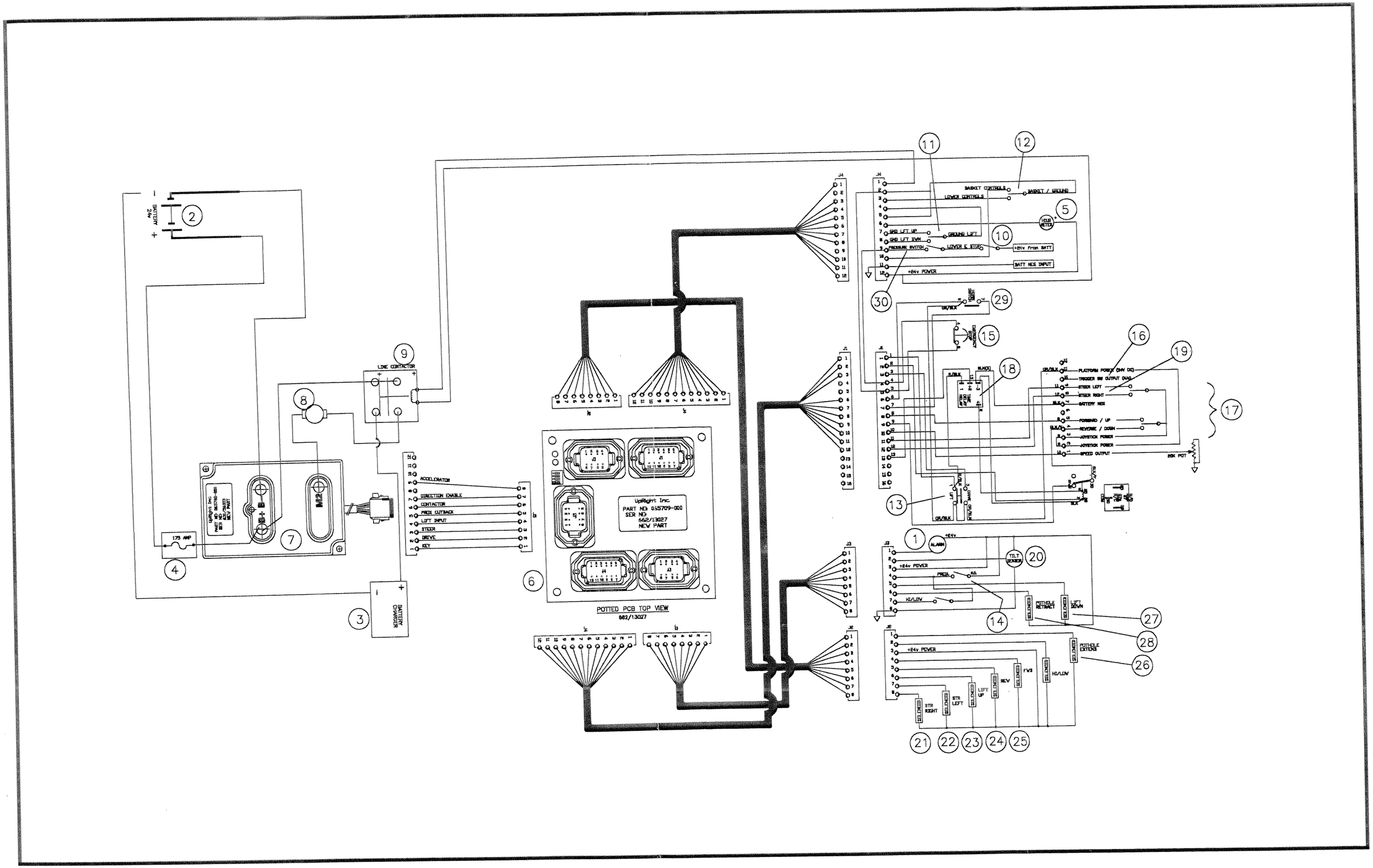
BATTERY 24v
LINE CONTACTOR
175 AMP
BATTERY CHARGER
ACCELERATOR
DIRECTION ENABLE
CONTACTOR
PROX CUTBACK
LIFT INPUT
STEER
DRIVE
KEY
UpRight Inc.
PART NO: 055709-000
SER NO: 662/13027
NEW PART
POTTED PCB TOP VIEW
662/13027
BASKET CONTROLS
BASKET / GROUND
LOWER CONTROLS
GND LIFT UP
GND LIFT DWN
PRESSURE SWITCH
GROUND LIFT
LOWER & STOP
HOUR METER
+84v from BATT
BATT NEG INPUT
+84v POWER
JUMPER
EMERGENCY STOP
PLATFORM POWER (24V DC)
TRIGGER SW OUTPUT (24V)
STEER LEFT
STEER RIGHT
BATTERY NEG
FORWARD / UP
REVERSE / DOWN
JOYSTICK POWER
JOYSTICK POWER
SPEED OUTPUT
20K POT
+24v
ALARM
TILT SENSOR
+24v POWER
PROX
HI/LOW
POTHOLE RETRACT
LIFT DWN
POTHOLE EXTEND
STR RIGHT
STR LEFT
LIFT UP
REV
FWD
HI/LOW
SOLENOID

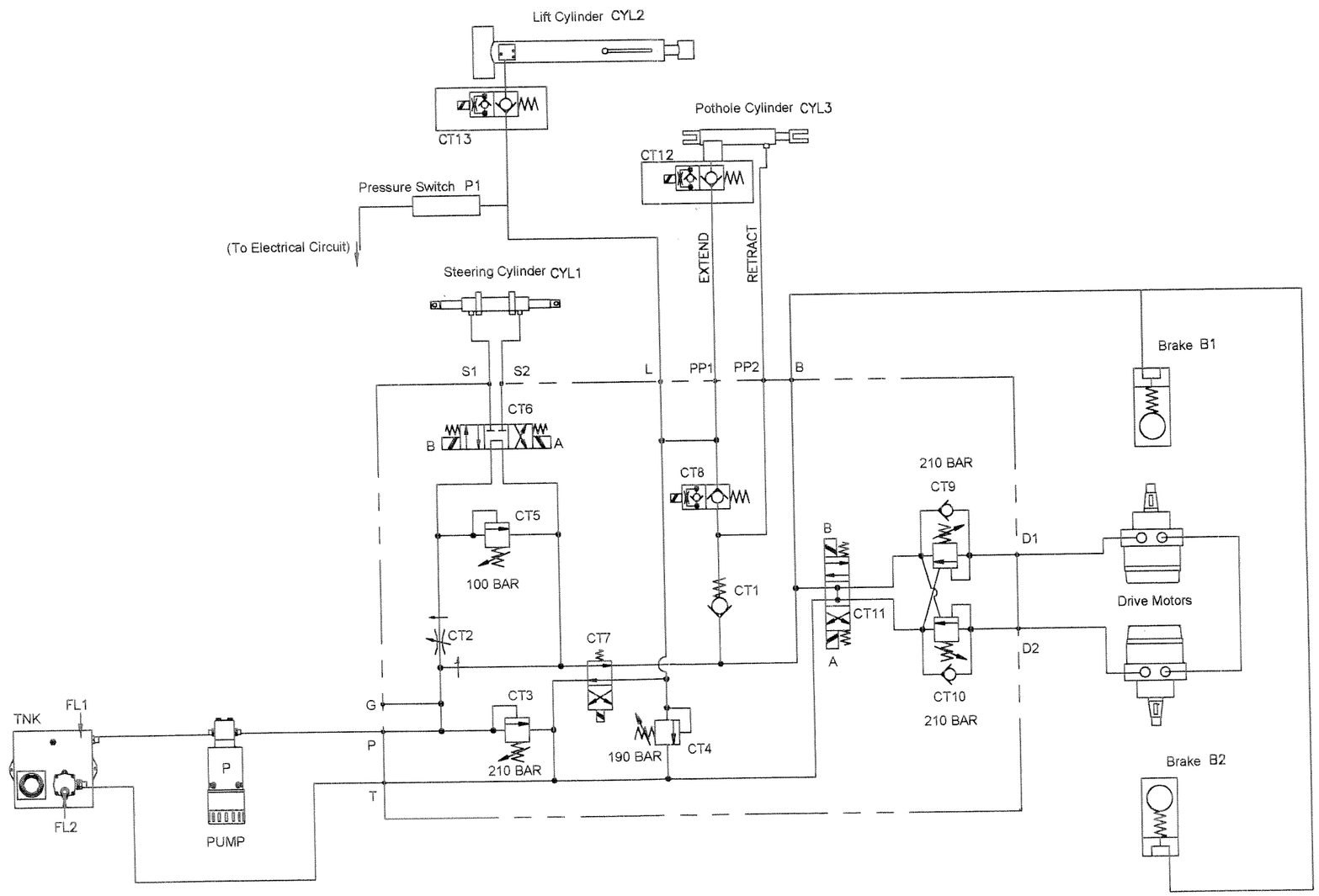
Lift Cylinder CYL2
CT13
Pothole Cylinder CYL3
CT12
Pressure Switch P1
(To Electrical Circuit)
EXTEND
RETRACT
Steering Cylinder CYL1
S1
S2
L
PP1
PP2
B
Brake B1
CT6
B
A
CT8
210 BAR
CT9
CT5
100 BAR
B
D1
CT1
Drive Motors
CT11
CT2
CT7
A
D2
CT3
CT10
210 BAR
G
TNK
FL1
P
190 BAR
CT4
210 BAR
Brake B2
T
FL2
PUMP

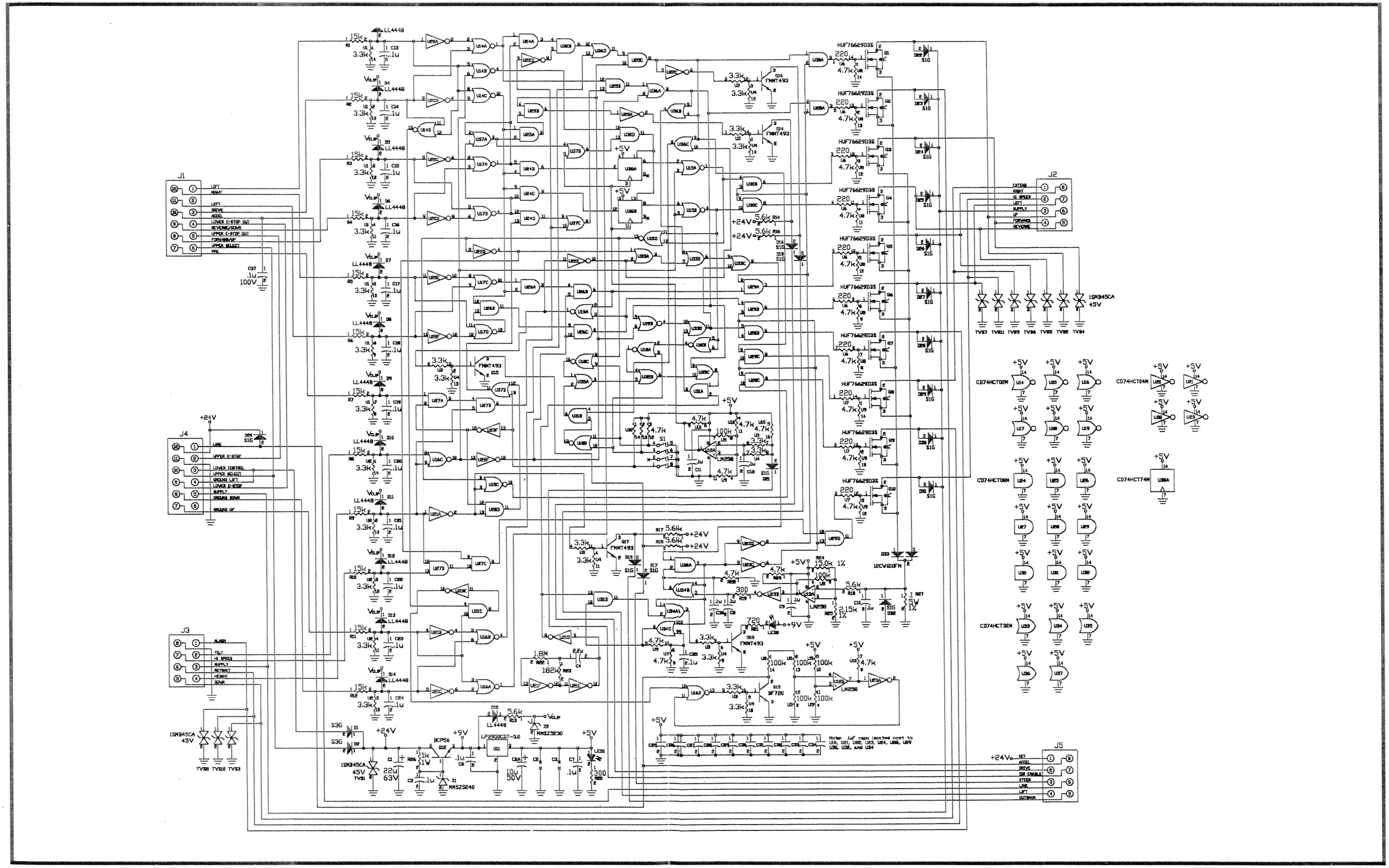
J1
J2
J3
J4
J5
+24V
+5V
+9V
HUF76629D3S
FMMT493
LL4448
CD74HCT02M
CD74HCT04M
CD74HCT74M
CD74HCT32M
1SMB45CA
45V
12CWQ10FN
LM258
BF720
BCP56
MMSZ5230
MMSZ5240
LP2950CDT-5.0

UpRight

UpRight
Unit S1, Parkwest Industrial Park, Friel Avenue,
Nangor Road, Dublin 12, Ireland.
Tel: 00353-1-620 9300 Fax: 00353-1-620 9301
Email: marketing@upright.com
www.upright.com